ST3/5-S

User Manual

Date: Nov, 2015

Vision: V1.1 (English)

SHINI

Contents

Picture Index

1. Safety

Before starting up the robot for the first time, please review this manual thoroughly and familiarize yourself with the operation of the robot. Improper use may injure personnel and/or damage the robot, mold or molding machine.

1.1 Safety Regulations

- Please review this manual thoroughly and familiarize yourself with the operation of the robot, before starting up the robot for the first time. Maintenance should be performed by qualified personnel only.
- The ST3/5-S series robot is designed for injection molding machine (IMM) ONLY.
- Any modification or change to the original design of the robot is forbidden.
- Any improper installation and operation may result in injury to personnel and/or damage to equipments.
- Please contact the manufacturer or local agent immediately if there is any problem with robot when operate it.
- Please note that our robot must be cooperated with other safety device (i.e. safety door) in order to operate in normal condition.
- Ensure all installations are met with safety requirements before operating.
- Without the written consent of the manufacturer, any damage or lost caused by the modification or use beyond the user manual, the manufacturer will not have any responsibility.

1.2 Safety Concerns

- The maintenance, repair, etc, must be executed by professionally trained personnel.
- Any unrelated personnel should keep away from robot working area while it is operating. All electrical wiring must be completed by professionals, and in accordance with design of specifications and wiring instructions.
- Use safety fence to indicate working area while installation.
- For the safety operation, the hand controller should be placed outside the robot working area.

- Ensure bolts and nuts are tightened with torque wrench while installation.
- Ensure there is no following matters in the compressive air such as phosphate-containing oil, organic solvents, sulfite gas, chlorine, acids and stale compressor oil.
- The air pressure should be kept at 6MPa ±0.1MPa while operation.
- Remove anything from the top of the robot to prevent falling due to vibration.
- Press EMERGENCY STOP button immediately when accident occurs.
- Do not modify the robot body and control box. Please contact manufacturer or vendor if any change is required.
- Turn off power supply and compressed air before maintenance and adjustment. Also set up warming signs and safety fences.
- Please use parts of SHINI if there is any replacement is required.
- Our robots meet all corresponding safety standards.
- Please read the user manual carefully as a safety guideline.
- Unauthorized personnel must inform the relative supervisor, and understand all safety rules before entering robot working area.
- Please order a new user manual from the manufacturer or vendor if the user manual is damaged.

Product owner has the responsibility to ensure the operators, maintenance staffs and relative staffs have read user manual thoroughly.

Any modifications or other applications to robot should obtain the written consent from the manufacturer, for safety purpose.

The safeguarding required for operation of the robot is not including in our standard scope of supply (except special equipment), since adaptation to specific site conditions is required. If such safeguarding is provided by you, please note that it must be installed prior to startup of the equipment in order to be included in the safety circuit of the system upon startup.

The warning marks and its meanings:

No.	Marks	Meaning
1		Do Not Touch
2		Caution, danger
3		Caution! Electric shock
4		Caution! Mechanical injury

5		Caution! High temperature
6		No Flame

1.3 Emergency Stop

The emergency stop button is located on the hand controller.

When the emergency stop button is pressed, the power is turned off. The gripper and vacuum valves and the vacuum generator are not disconnected, in order to avoid dropping parts from the gripper. In addition, the control system and the hand controller will remain under power to allow indication of error messages.

The emergency stop button can be released by turning it clockwise.

The emergency stop circuit of the robot and the injection molding machine are connected by the Euromap12 or Euromap67 interface. Therefore when the emergency stop button on the molding machine is pressed the robot will also stop and vice versa.

1.4 Transportation and Storage

During transporting the robot, working underneath the robot is forbidden.

If it is necessary to remove or reinstall the robot, please contact the agent or manufacturer for help. The manufacturer and agent do not have any responsibility for injuries or damage if the customers remove robots themselves.

1.4.1 Transportation

1. ST3/5-S series robot is fix on a steel structure base and packaged with crate.
2. Before transporting, fasten the sliding base to prevent any collision.
3. The arms are free to slide when electric power and pneumatic supply are off. Push the arms upwards to lock them.
4. During the transporting, please keep the robot away from other objects, in order to avoid damages.
5. Should increase plastic bag out of the robot, and if necessary, pumping vacuum and put desiccant in the packing during the long-distance transportation,
6. The temperature between -25℃ to 55℃ during the transportation, for short transportation (inner 24 hours), the temperature can not higher than 70℃.

The robot you order before sending out the factory, it is confirmed in good working condition, please check whether there is any damage during carrying or transporting. Please be carefully, when dismantling of components and packaging, if the robot has found the injury, you can use the package again.
If there is any damage caused by transport, please:

1) Feedback immediately to the transportation companies and our company.
2) Claim damages to the shipping company; fill in the file requests for compensation.
3) Retain the damaged items stand-by for testing. Until the testing is completed, do not return the damaged items.

1.4.2 Transportation after Unpacking

1. After taking apart the package, first removed the supporting plate, so that the arm rotated 90 degrees, and the vertical with beams (see the picture). To do

as the following:

1) Release 6 fixed screws on the supporting board, remove the packing support plate.
2) Rotating beams and arm slowly, so that the arm and the beam was vertical.
3) Lock the arm connecting plate and the sliding seat by the 6 screws on the supporting plate.

Note:

1) Remove the packing support plate should be careful to prevent the arm wrist and the machine damage or personal injury.
2) Lock the arm connecting plate and the sliding seat, ensure that the arm in vertical state.

2. There is a ring in the parts box when the robot sent, after taking apart the package, the ring is installed on the "T"-type block of the vertical beam, using with the two ends of beam. (See the picture 1-1)

Note: After hoisting, please keep rings of the vertical beam, and use again next time.

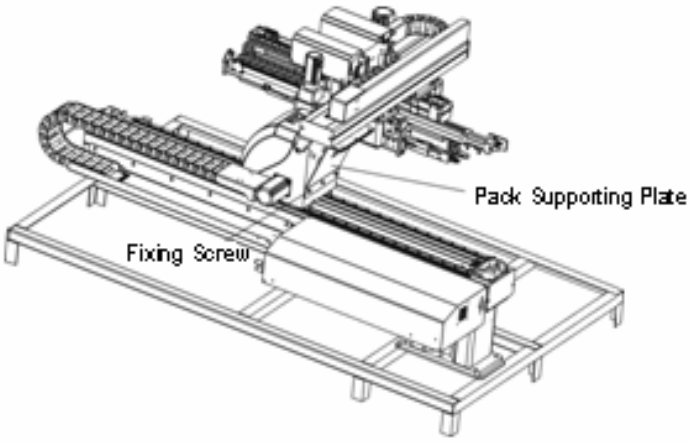

Picture 1-1: Packing of ST3-T-S and ST5-T-S

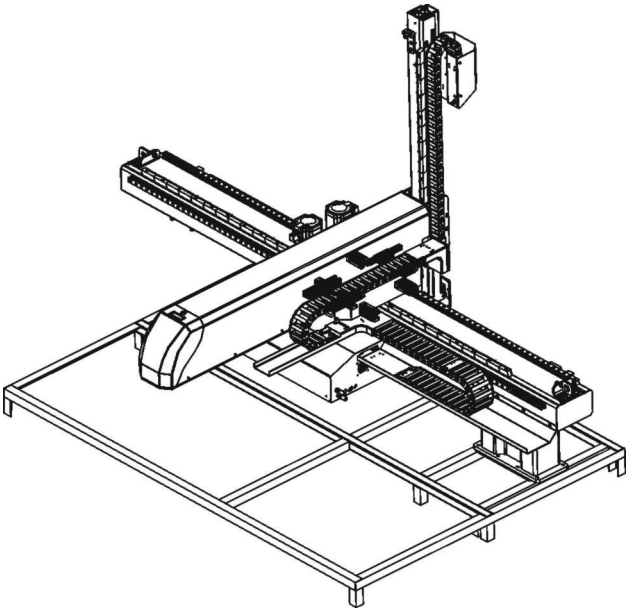

Picture 1-2: Packing of ST3-LT-S

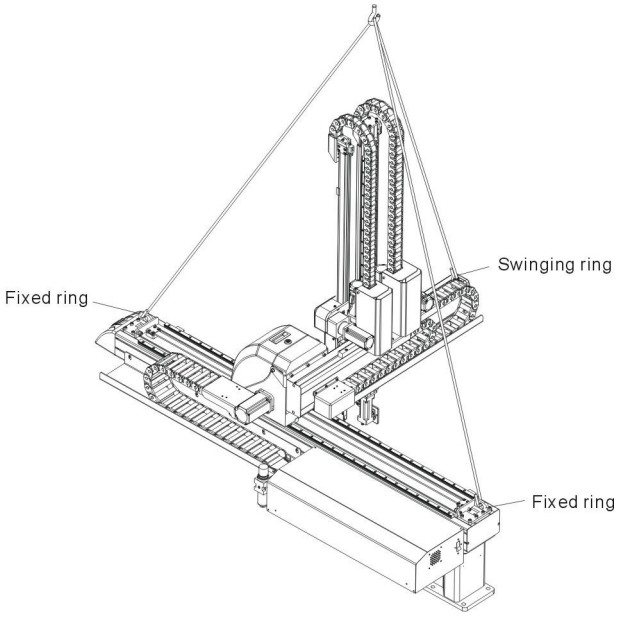

Picture 1-3: Hanging transportation of ST3-T-S

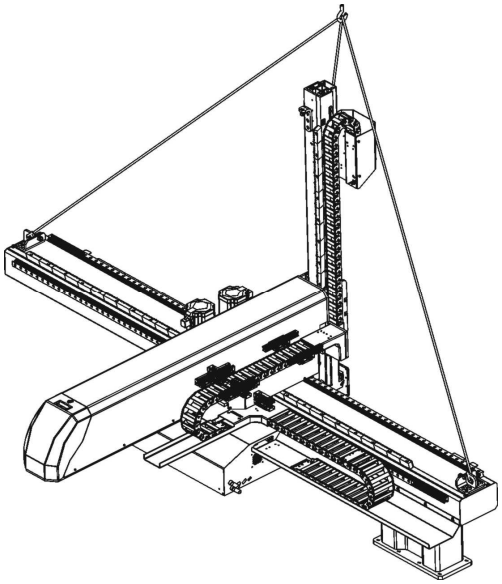

Picture 1-4: Hanging transportation of ST3-LT-S

1.4.3 Storage

1. Switch off the main air source and power, if robot is not in use for a long time.
2. Robots should be stored in ventilated, dry room to prevent rust and damping.
3. If not use for a long time, please anti-rust, and if necessary place film to prevent dust and erosion.

1.4.4 Operation Environment

1. Temperature: between +5℃ to +40℃
2. Humidity: Temperature +40℃, relative humidity 50%
3. Elevation: Under 1000 meters above sea level
4. Stop using the product immediately when the following occurs:

I. Power cable is damaged

II. Air tube is damaged

III. Machine breaks down or dissembled by unauthorized personnel.

IV. There are organic solvent, acidic phospholipids, sulfurous acid, and chlorine, flammable and explosive dangerous matter in compressed air

Ⅴ. Air pressure is not enough or too high.

1.4.5 Retirement

When the robot goes to its end of service life, it should be demolished according

to different martial (metal, oil, lubricants, plastics, rubber, etc.) to split in different ways. Deal with the machine according to local requirements; ensure the commission company as the best.

Any problem during using the SHINI ST3/5-S Series Robot, please contact the company or the local vendor.

1.5 Exemption Clause

The following statements clarify the responsibilities and regulations born by any buyer or user who purchases products and accessories from Shini (including employees and agents).

Shini is exempted from liability for any costs, fees, claims and losses caused by reasons below:

1. Any careless or man-made installations, operation and maintenances upon machines without referring to the Manual prior to machine using.

2. Any incidents beyond human reasonable controls, which include man-made vicious or deliberate damages or abnormal power, and machine faults caused by irresistible natural disasters including fire, flood, storm and earthquake.

3. Any operational actions that are not authorized by Shini upon machine, including adding or replacing accessories, dismantling, delivering or repairing.

4. Employing consumables or oil media that are not appointed by Shini.

Headquarters & Taipei Factory:	TEL: (02)26809119
China Service Hotline:	TEL: 800-999-3222
Dongguan Factory:	TEL: (0769)83313588
Ningbo factory:	TEL: (0574)86719088

2. Installaiton

2.1 Instruction

2.1.1 Safety Issue

1. Before installation, please read this chapter carefully.
2. Fix robot on the base before operating.
3. After installing robot, indicate the working area with safety fence.
4. The hand controller should be placed outside of the safety fence.
5. Keep the air pipe in good way during installation.
6. The power connection should be performed only by authorized electrician.
7. Connecting cable and the grounded should obey the local rules and regulations.
8. The grounded wire can not attach to the water pipes, gas pipes, telephone lines or television cables.
9. Use the independent cable and power switch, the diameter of main power wire can not be less than the wire of control box.
10. The end of the power wire must be safety and immobility.

2.1.2 Compressed Air Connection

1. According to the filter specifications to choose a suitable hose connected between the air source and the filter.

Note: Before connecting hoses, clean the hoses by compressed air. To ensure that there is no cuttings, sealing tapes in it.

2. Check the air connection of control box in good conditions, without bending conditions.

Air hoses: V1, V2 stands for vacuum. G1, G2 stands for gripper. HI1, HO1 stands for one pair of air cylinders. HI2, HO2 stands for two pairs of air cylinders.

2.1.3 Electric Power Connection

1. The electrical connection should be performed only by authorized electrician.
2. Shut off the power supply before connecting.
3. Set up the safety electrical outside of the control system to keep the control system works in normally.

4. Before installation, wiring, operation, and maintenance must be familiar with instructions guide as well as machinery, electronics and security attentions.
5. Ground the wire before robot operating.
6. Wire grounding should connect to metal and keep away from inflammable matter.

The power requirements are given on the type plate of the robot, the power connection is provided through a normal power cord and a CEE plug.

The power connection should be performed only by authorized electrician and should be in accordance with any applicable regulations.

2.1.4 Safety Fence

1. After installing the robot, indicate the safety fence outside the scope of the robot working area.
2. The hand controller should be fixed outside of the safety fence.
3. Stick the warning signals on outstanding place of the fence.

2.1.5 Mounting Preparation

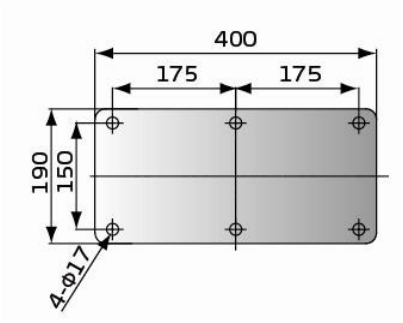

For signal and telescopic arm (small type) robot

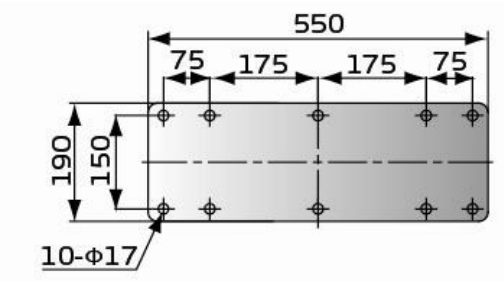

For signal、telescopic arm (small type) and medium telescopic

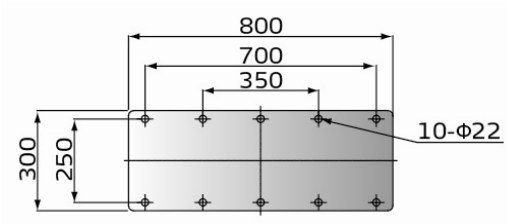

For medium telescopic

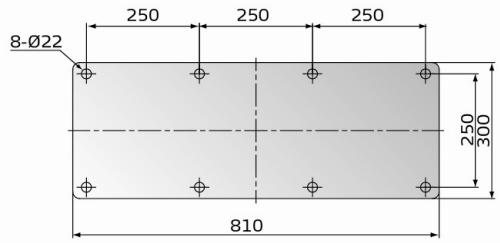

For large telescopic

1. Before drilling, switch off the injection molding machine and then turn off the power, avoid the scrap-iron into the mold.
2. Stick the drilling picture on the installing surface of IMM.
3. Use the center punch to assist drilling.
4. Place the magnetic drill on the fixing plate, use drill bits (Φ14) to drill 6 holes about 30mm depth.
5. Tapping. Use M16 tap to produce internal 6 screws threads about 25mm depth.

2.1.6 Mounting Instruction

1. Should avoid vibration, collision and falling, when transfer the top of IMM.
2. Alignment holes, using the 8mm torque wrench turn to 77Nm tightens the M16 × 30 hex socket screws.

Note: if with the connection base, fix it on the injection molding machine, then fix robot on connection base.

2.2 Equipment Specification

2.2.1 Three Axes Servo Signal Telescopic Specification

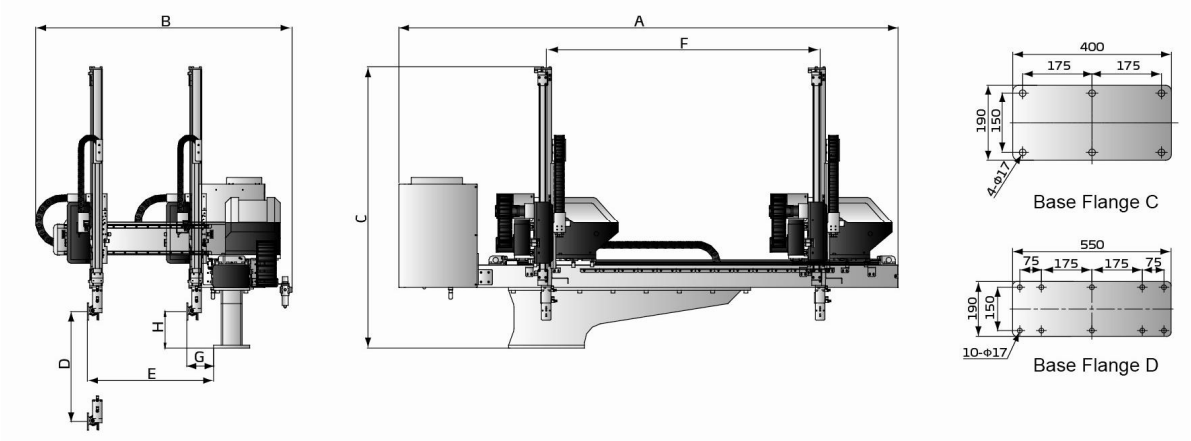

Picture 2-1: Three Axes Servo Signal Telescopic Dimensions

Chart 2-1: Three Axes Servo Signal Telescopic List 1

Model		ST3-700-1200-S	ST3-700-1400-S	ST3-800-1400-S	ST3-900-1600-S
Application IMM (ton)		50~80	80~180	180~220	220~280
Traverse Stroke (mm)		1200	1400	1400	1600
Crosswise Stroke (mm)		470	470	470	560
Vertical Stroke (mm)		700	700	800	900
Max Load (kg)		3	3	3	5
Min Pick-out Time (sec)		1.3	1.3	1.3	1.4
Min Cycle Time (sec)		5.2	5.2	5.2	5.8
Air Pressure Range (bar)		4~6	4~6	4~6	4~6
Max Air Consumption (NL/cycle)*		4	4	4	4
Net Weight (kg)		240	240	250	270
Base Type		Base C	Base C	Base C	Base C
Dimensions (mm)	A	2480	2680	2680	2880
	B	1350	1350	1350	1450
	C	1490	1490	1590	1690
	D(max)	700	700	800	900
	E(max)	610	610	610	710
	F(max)	1200	1400	1400	1600
	G	155	155	155	155
	H	200	200	200	200

Note: 1. “M” stands for middle mold detector. (Suitable for three-plate mold.)
“EM12” stands for EUROMAP 12 communication interface.
“EM67” stands for EUROMAP 67 communication interface.
“N” stands for non-operation side,operation side without “N”
2. Power supply requirement: 1Φ, 200~240V, 50/60Hz.
3. “ * ” Max air consumption for suction device 60Nl/min.

Chart 2-2: Three Axes Servo Signal Telescopic List 2

Model		ST3-1000-1600-S	ST3-1100-1800-S	ST3-1200-1800-S
Application IMM (ton)		280~320	320~400	400~450
Traverse Stroke (mm)		1600	1800	1800
Crosswise Stroke (mm)		610	690	690
Vertical Stroke (mm)		1000	1100	1200
Max Load (kg)		5	5	5
Min Pick-out Time (sec)		1.4	1.6	1.6
Min Cycle Time (sec)		6.2	6.5	6.8
Air Pressure Range (bar)		4~6	4~6	4~6
Max Air Consumption (NL/cycle)*		4	4	4
Net Weight (kg)		280	300	310
Base Type		Base C	Base D	Base D
Dimensions (mm)	A	2880	3120	3120
	B	1490	1570	1570
	C	1800	1900	2000
	D(max)	1000	1100	1200
	E(max)	775	855	855
	F(max)	1600	1800	1800
	G	165	165	165
	H	180	180	180

Note: 1. “M” stands for middle mold detector. (Suitable for three-plate mold.)
“EM12” stands for EUROMAP 12 communication interface.
“EM67” stands for EUROMAP 67 communication interface.
“N” stands for non-operation side,operation side without “N”
2. Power supply requirement: 1Φ, 200~240V, 50/60Hz.
3. “ * ” Max air consumption for suction device 60Nl/min.

2.2.2 Three Axes Servo Telescopic Arm (Small type) Specifications

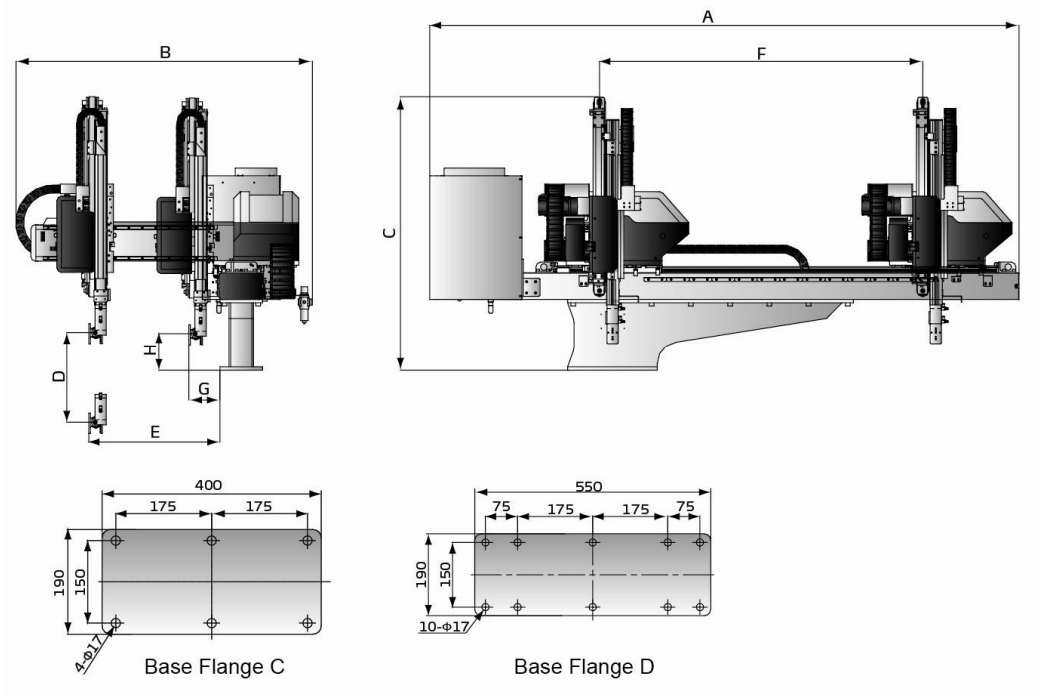

Picture 2-2: Three Axes Servo Telescopic Arm (Small type) Dimensions

Chart 2-3: Three Axes Servo Telescopic Arm (Small type) List 1

Model		ST3-700-1200T-S	ST3-700-1400T-S	ST3-700-1400HT-S	ST3-800-1400T-S
Application IMM(ton)		50~80	80~180	80~180	180~220
Traverse Stroke(mm)		1200	1400	1400	1400
Crosswise Stroke(mm)		425	425	425	425
Vertical Stroke(mm)		700	700	700	800
Max Load(kg)		3	3	3	3
Min Pick-out Time(sec)		1.2	1.2	0.8	1.2
Min Cycle Time（sec）		5	5	4.5	5
Air Pressure Range(bar)		4~6	4~6	4~6	4~6
Max Air Consumption (NL/cycle)		4	4	4	4
Net Weight(kg)		240	240	245	250
Base Type		Base C	Base C	Base C	Base C
Dimensions (mm)	A	2480	2680	2680	2680
	B	1365	1365	1365	1365
	C	1220	1220	1220	1270
	D	700	700	700	800
	E	630	630	630	630
	F	1200	1400	1400	1400
	G	155	155	155	155
	H	170	170	170	170

Chart 2-4: Three Axes Servo Telescopic Arm (Small type) List 2

Model		ST3-900 -1600T-S	ST3-900 -1600HT-S	ST3-1000 -1600T-S	ST3-1100 -1800T-S	ST3-1200 -1600T-S
Application IMM(ton)		220~280	220~280	280~320	320~400	400~450
Traverse Stroke(mm)		1600	1600	1600	1800	1800
Crosswise Stroke(mm)		525	525	650	680	680
Vertical Stroke(mm)		900	900	1000	1100	1200
Max Load(kg)		5	5	5	5	5
Min Pick-out Time(sec)		1.3	1	1.3	1.5	1.5
Min Cycle Time（sec）		5.5	4.8	6	6.2	6.5
Air Pressure Range(bar)		4~6	4~6	4~6	4~6	4~6
Max Air Consumption (NL/cycle)		4	4	4	4	4
Net Weight(kg)		270	275	280	300	310
Base Type		Base C	Base C	Base C	Base D	Base D
Dimensions (mm)	A	2880	2880	2940	3120	3120
	B	1465	1465	1550	1610	1610
	C	1330	1330	1380	1440	1490
	D	900	900	1000	1100	1200
	E	720	720	805	865	865
	F	1600	1600	1600	1800	1800
	G	155	155	155	155	155
	H	180	180	200	200	200

Note: 1. “M” stands for middle mold detector. (Suitable for three-plate mold.)
“EM12” stands for EUROMAP 12 communication interface.
“EM67” stands for EUROMAP 67 communication interface.
“N” stands for non-operation side,operation side without “N”
2. Power supply requirement: 1Φ, 200~240V, 50/60Hz.
3. “ * ” Max air consumption for suction device 60Nl/min.

2.2.3 Three Axes Servo Medium Telescopic Specifications

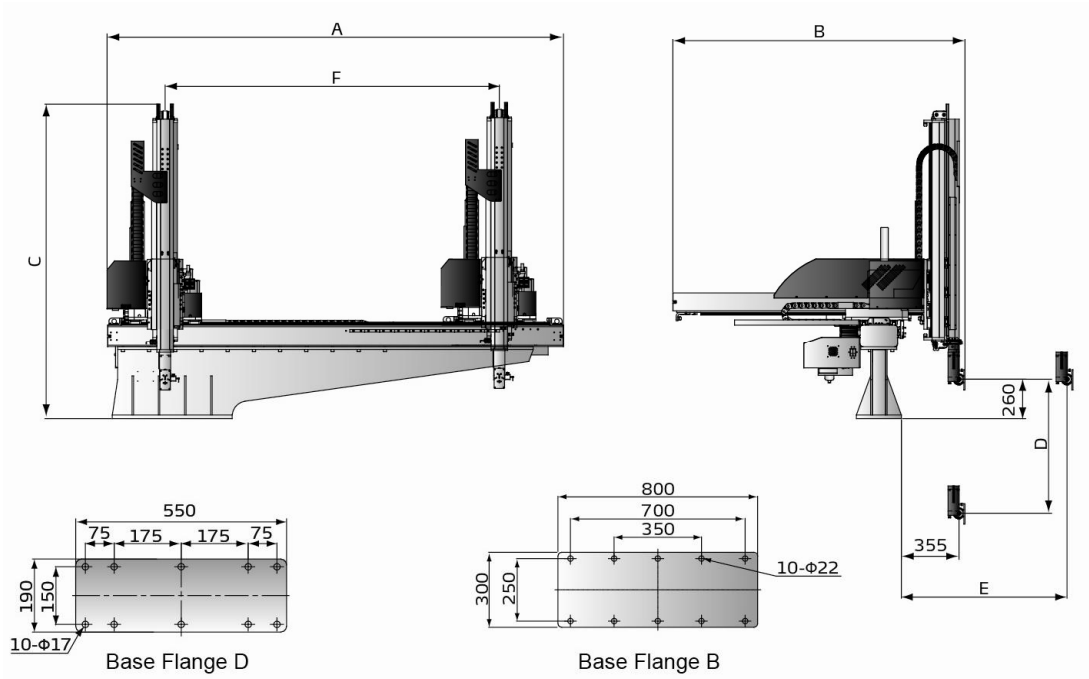

Picture 2-3: Three Axes Servo Medium Telescopic Dimensions

Chart 2-5: Three Axes Servo Medium Telescopic List 1

Model		**ST3-1200 -1800MT-S**	**ST3-1300 -2000MT-S**	**ST3-1400 -2000MT-S**	**ST3-1500 -2200MT-S**	**ST3-1600 -2200MT-S**	**ST3-1700 -2200MT-S**
Application IMM(ton)		300~450T	450~600T	450~600T	600~700T	700~850T	700~850T
Traverse Stroke(mm)		1800	2000	2000	2200	2200	2200
Crosswise Stroke(mm)		800	800	900	900	1000	1000
Vertical Stroke(mm)		1200	1300	1400	1500	1600	1700
Max Load(kg)		10(15)	10(15)	10(15)	10(15)	20(30)	20(30)
Min Pick-out Time(sec)		2.8	3	3	3.2	3.3	3.4
Min Cycle Time（sec）		12	12.5	13	13.5	14	15
Air Pressure Range(bar)		4~6	4~6	4~6	4~6	4~6	4~6
Max Air Consumption (NL/cycle)		6	6	6	6	6	6
Net Weight(kg)		480	500	530	550	580	600
Base Type		Base D	Base D	Base D	Base B	Base B	Base B
Dimensions (mm)	A	2847	3047	3047	3247	3247	3247
	B	1617	1617	1717	1717	1817	1817
	C	1790	1840	1890	1940	2020	2070
	D(max)	1200	1300	1400	1500	1600	1700
	E(max)	1155	1155	1255	1255	1355	1355
	F(max)	1800	2000	2000	2200	2200	2200

Chart 2-6: Three Axes Servo Medium Telescopic List 2

Model		ST3-1800 -2400MT-S	ST3-1900 -2400MT-S	ST3-2000 -2800MT-S	ST3-2100 -2800MT-S	ST3-2200 -3000MT-S
Application IMM(ton)		850~1400T	850~1400T	1400~1800T	1400~1800T	1800~2400T
Traverse Stroke(mm)		2400	2400	2800	2800	3000
Crosswise Stroke(mm)		1200	1200	1200	1400	1400
Vertical Stroke(mm)		1800	1900	2000	2100	2200
Max Load(kg)		20(30)	20(30)	20(30)	20(30)	20(30)
Min Pick-out Time(sec)		3.6	3.6	3.8	3.8	4
Min Cycle Time（sec）		16	17	17.5	18	19
Air Pressure Range(bar)		4~6	4~6	4~6	4~6	4~6
Max Air Consumption (NL/cycle)		6	6	6	6	6
Net Weight(kg)		650	670	690	720	750
Base Type		Base B	Base B	Base B	Base B	Base B
Dimensions (mm)	A	3447	3447	3847	3847	4047
	B	2017	2017	2017	2270	2270
	C	2120	2170	2220	2270	2320
	D(max)	1800	1900	2000	2100	2200
	E(max)	1555	1555	1555	1755	1755
	F(max)	2400	2400	2800	2800	3000

Note: 1. “M” stands for middle mold detector. (Suitable for three-plate mold.)
“EM12” stands for EUROMAP 12 communication interface.
“EM67” stands for EUROMAP 67 communication interface.
“N” stands for non-operation side,operation side without “N”
2. Power supply requirement: 1Φ, 200~240V, 50/60Hz.
3. “ * ” Max air consumption for suction device 60Nl/min.

2.2.4 Three Axes Servo Large Telescopic Specifications

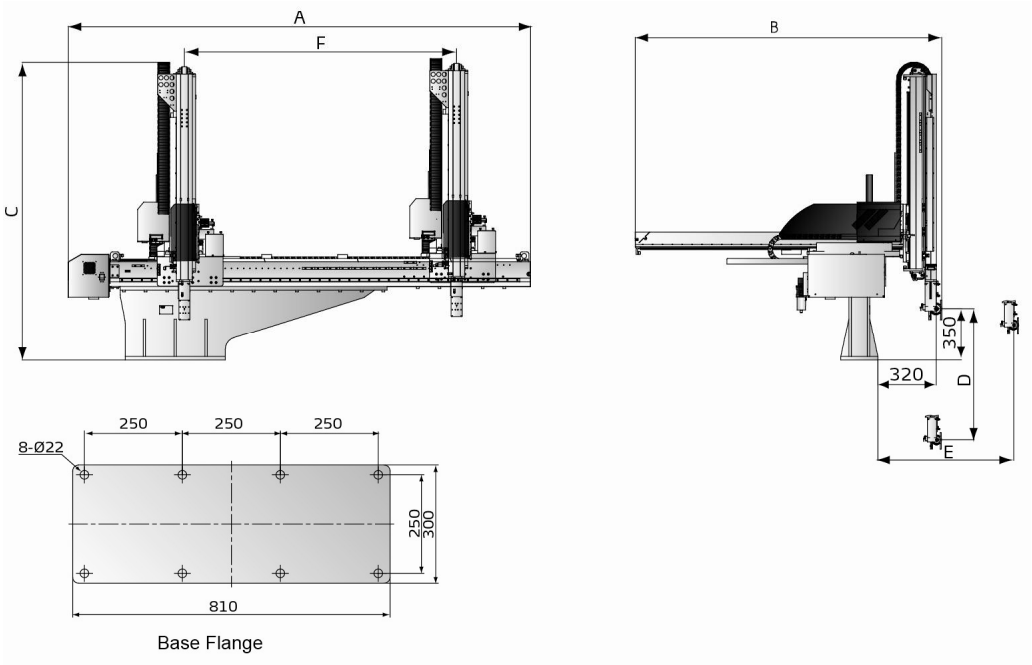

Picture 2-4: Three Axes Servo Large Telescopic Dimensions

Chart 2-7: Three Axes Servo Large Telescopic List

Model		ST2-1800 -2400LT-S	ST2-2000 -2800LT-S	ST2-2200 -3000LT-S	ST2-2600 -3200LT-S	ST2-3000 -3400LT-S
Application IMM(ton)		850~1400T	1400~1800T	1800~2400T	2400~3000T	3000~3600T
Traverse Stroke(mm)		2400	2800	3000	3200	3400
Crosswise Stroke(mm)		1340	1500	1500	1660	1820
Vertical Stroke(mm)		1800	2000	2200	1600	3000
Max Load(kg)		40(60)	40(60)	40(60)	40(60)	40(60)
Min Pick-out Time(sec)		3.8	4.0	4.2	4.5	5.0
Min Cycle Time（sec）		20	22	24	26	28
Air Pressure Range(bar)		4~6	4~6	4~6	4~6	4~6
Max Air Consumption(NL /cycle)		8	8	8	8	8
Net Weight(kg)		920	950	990	1010	1080
Dimensions (mm)	A	3800	4200	4400	4600	4800
	B	2500	2650	2650	2820	2980
	C	2400	2500	2600	2800	3000
	D(max)	1800	2000	2200	2600	3000
	E(max)	1750	1900	1900	2050	2250
	F(max)	2400	2800	3000	3200	3400

Note: 1. “M” stands for middle mold detector. (Suitable for three-plate mold.)
“EM12” stands for EUROMAP 12 communication interface.
“EM67” stands for EUROMAP 67 communication interface.
“N” stands for non-operation side,operation side without “N”
2. Power supply requirement: 1Φ, 200~240V, 50/60Hz.
3. “ * ” Max air consumption for suction device 60Nl/min.

2.2.5 Five Axes Servo Signal Telescopic Specification

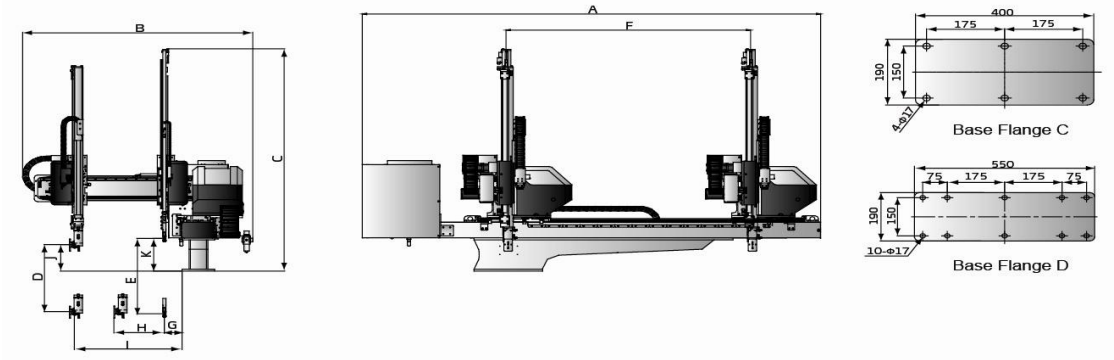

Picture 2-5: Five Axes Servo Signal Telescopic Dimensions

Chart 2-8: Five Axes Servo Signal Telescopic List

Model		ST5-700 -1400D-S	ST5-800 -1400D-S	ST5-900 -1600D-S	ST5-1000 -1600D-S	ST5-1100 -1800D-S	ST5-1200 -1800D-S
Application IMM(ton)		80~180	180~220	220~280	280~320	320~400	400~450
Traverse Stroke(mm)		1400	1400	1600	1600	1800	1800
Crosswise Stroke (mm)	Main Arm	370	370	420	530	590	590
	Sub Arm	370	370	420	530	590	590
Vertical Stroke(mm)	Main Arm	700	800	900	1000	1100	1200
	Sub Arm	750	850	950	1050	1150	1250
Max Load(kg)		3	3	5	5	5	5
Min Pick-out Time(sec)		1.3	1.3	1.4	1.4	1.6	1.6
Min Cycle Time（sec）		5.2	5.2	5.8	6.2	6.5	6.8
Air Pressure Range(bar)		4~6	4~6	4~6	4~6	4~6	4~6
Max Air Consumption (NL/cycle)		4	4	4	4	4	4
Net Weight(kg)		280	290	310	320	340	350
Base Type		Base C	Base C	Base C	Base C	Base D	Base D
Dimensions (mm)	A	2740	2740	2960	2960	3160	3160
	B	1390	1390	1410	1600	1660	1660
	C	1630	1730	1830	1930	2030	2130
	D(max)	700	800	900	1000	1100	1200
	E(max)	750	850	950	1050	1150	1250
	F(max)	1400	1400	1600	1600	1800	1800
	G(min)	145	145	135	135	135	135
	H(min)	160	160	160	180	180	175
	I(max)	650	650	690	835	895	895
	J	150	150	150	180	180	180
	K	190	190	190	190	190	190

Note: 1. “M” stands for middle mold detector. (Suitable for three-plate mold.)
“EM12” stands for EUROMAP 12 communication interface.
“EM67” stands for EUROMAP 67 communication interface.
“N” stands for non-operation side,operation side without “N”
2. Power supply requirement: 1Φ, 200~240V, 50/60Hz.
3. “ * ” Max air consumption for suction device 60Nl/min.

2.2.6 Five Axes Servo Telescopic Arm (Small type)Specifications

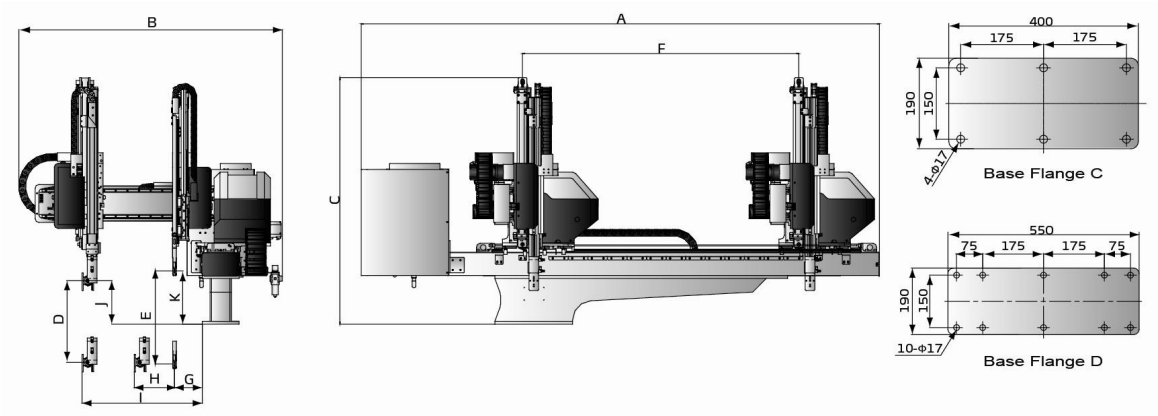

Picture 2-6: Five Axes Servo Telescopic Arm (Small type) Dimensions

Chart 2-9: Five Axes Servo Telescopic Arm (Small type) List

Model		ST5-700 -1400DT-S	ST5-800 -1400DT-S	ST5-900 -1600DT-S	ST5-1000 -1600DT-S	ST5-1100 -1800DT-S	ST5-1200 -1800DT-S
Application IMM(ton)		80~180	180~220	220~280	280~320	320~400	400~450
Traverse Stroke(mm)		1400	1400	1600	1600	1800	1800
Crosswise Stroke (mm)	Main Arm	320	320	370	475	535	535
	Sub Arm	320	320	370	475	535	535
Vertical Stroke(mm)	Main Arm	700	800	900	1000	1100	1200
	Sub Arm	750	850	950	1050	1150	1250
Max Load(kg)		3	3	5	5	5	5
Min Pick-out Time(sec)		1.2	1.2	1.3	1.3	1.5	1.5
Min Cycle Time（sec）		5	5	5.5	6	6.2	6.5
Air Pressure Range(bar)		4~6	4~6	4~6	4~6	4~6	4~6
Max Air Consumption (NL/cycle)		4	4	4	4	4	4
Net Weight(kg)		280	290	310	320	340	350
Base Type		Base C	Base C	Base C	Base C	Base D	Base D
Dimensions (mm)	A	2735	2735	2955	2955	3155	3155
	B	1430	1430	1490	1610	1670	1670
	C	1220	1270	1340	1400	1460	1520
	D	700	800	900	1000	1100	1200
	E	750	850	950	1050	1150	1250
	F	1400	1400	1600	1600	1800	1800
	G	185	185	185	185	185	185
	H	140	140	140	135	145	145
	I	645	645	700	805	865	865
	J	175	175	185	205	205	205
	K	220	220	245	245	245	245

Note: 1. “M” stands for middle mold detector. (Suitable for three-plate mold.)
“EM12” stands for EUROMAP 12 communication interface.
“EM67” stands for EUROMAP 67 communication interface.
“N” stands for non-operation side,operation side without “N”
2. Power supply requirement: 1Φ, 200~240V, 50/60Hz.
3. “ * ” Max air consumption for suction device 60Nl/min.

2.2.7 Five Axes Servo Medium Telescopic Specifications

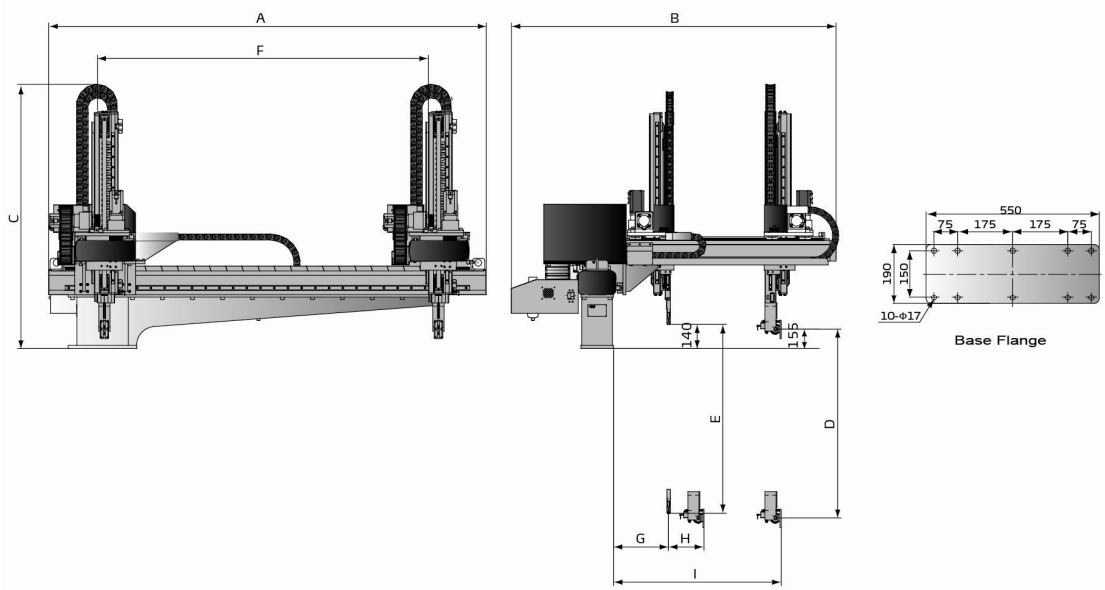

Picture 2-7: Five Axes Servo Medium Telescopic Dimensions

Chart 2-10: Five Axes Servo Medium Telescopic List

Model		ST5-1300-2000DT-S	ST5-1500-2200DT-S
Application IMM(ton)		450~650	650~850
Traverse Stroke(mm)		2000	2200
Crosswise Stroke (mm)	Main Arm	630	750
	Sub Arm	630	750
Vertical Stroke(mm)	Main Arm	1300	1500
	Sub Arm	1350	1550
Max Load(kg)		10	12
Min Pick-out Time(sec)		3.2	3.5
Min Cycle Time（sec）		9	9.5
Air Pressure Range(bar)		4~6	4~6
Max Air Consumption (NL/cycle)		5	5
Net Weight(kg)		810	930
Dimensions (mm)	A	2800	3000
	B	2020	2140
	C	1650	1750
	D(max)	1300	1500
	E(max)	1350	1550
	F(max)	2000	2200
	G(min)	245	245
	H(min)	170	170
	I(max)	1100	1220

Note: 1. “M” stands for middle mold detector. (Suitable for three-plate mold.)
“EM12” stands for EUROMAP 12 communication interface.
“EM67” stands for EUROMAP 67 communication interface.
“N” stands for non-operation side,operation side without “N”
2. Power supply requirement: 1Φ, 200~240V, 50/60Hz.
3. “ * ” Max air consumption for suction device 60Nl/min.

2.2.8 Pneumatic Source Requirement

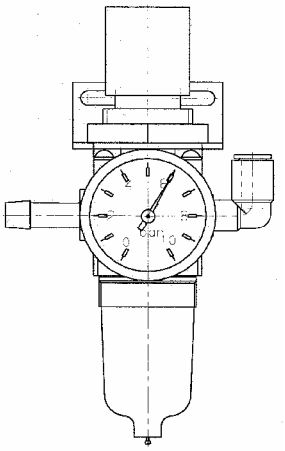

Compressed air is connected by 1/4—Φ10 trachea. Filter pressure valve with a clear scale line, convenient adjustment. Bring adjustment knob upward and with a clockwise rotation, pressure increases; counterclockwise rotation, air pressure decreases, the pressure range between 0 to 8bar. After adjustment, Please press the adjustment knob to lock pressure.

Required supply pressure: 4bar-6bar

When the pressure is equal or drop below than 4 bar, the robot will stop working and alarm. When the pressure up to 6bar, It will affect the service life of pneumatic components.

Compressed air consumption depends on the robot accessories.

To calculate the actual usage for your device exactly, see the standard values from the following table:

Usage per stroke		Usage/second
C-axis	Gripper	Sucker
0.3	0.1	0.5

Note: the values given are for an operation pressure of 5bar and are given in dm^3.

2.3 Electrical Connection

2.3.1 Main Power Supply

The power requirements are given on the serial plate of the robot, the power connection is provided through cable conductor and CEE plug.

⚠ The power connection should be performed only by an authorized electrician and according to applicable electric utility regulations.

2.3.2 Interface with the Injection Molding Machine

The robot is equipped with standard electrical interfaces according to Euromap12 and Euromap67.

Connection of the interface plug to the machine and testing of all signals must be done by a specialist in injection molding machines and robots. Preferably, this should be done by one of our service engineers together with a qualified service engineer for the injection molding machine.

The interface signal functions must be carefully tested, as improper operation may cause malfunction or damage to the robot and molding machine.

In particular, the functions of the safety circuits must be thoroughly checked.

- Testing the emergency stop signals to and from the IMM.

When press the emergency stop switch on hand controller, the error message emergency stop must also be indicated at the IMM. And when press the emergency stop on IMM, the emergency stop signal must also be indicated at the robot.

2.4 Gripper and Vacuum Monitor

2.4.1 Gripper Setting

If the gripper didn't clamp parts in opened state or in the closed state, the light of the magnetic switch is off. If the gripper clamed parts, the magnetic switch is on.

Adjusting the Magnetic Switch:

1. Loosen the screw which is fixed on the magnetic switch.
2. Make the light on when gripper clamp the parts, if not make the light off.
3. Tighten the fixing screw after finishing adjustment.

During the robot working, if the grippers not clamp the part, the robot will stop operating and alarm.

2.4.2 Vacuum Setting

1. The default setting is 4bar, it can be adjusted according to the actual needs.
2. Digital pressure switch marked with scale, the internal of the digital pressure switch has a red ruler, which connected with the adjustment screw, when the

rotation adjustments screw, the red ruler will move too.

3. Need to adjust the pressure, the user can rotate red ruler to set the value by the hex key, clockwise rotation, the value increased, counter-clockwise rotation, the value decrease.

2.4.3 CKD Digital Pressure Switch Setting

1. Hysteresis mode

a: Press “Mode” 2 seconds in measurement mode in to “Comparative output 1 mode setting”. Press up/down key till the screen display “HYS”.

b: Press “Mode” once into “Comparative output 2 mode setting”. Press up/down key till the screen display “OFF”.

c: Press “Mode” once into “N.o./N.c. selection”(Normal open or normal close). Press up/down key till the screen display “NC”.

d: Press “Mode” once into “Response time setting”. Press up/down sets the response time (default setting: 2.5ms).

e: Press “Mode” once into “Displayed color of the main display selection”. Press up/down key till the screen display “R-ON”.

f: Press “Mode” once back to measurement mode.

2. Pressure value range setting:

The upper limit: for example “-50”, press “Mode” screen display “L0-1”, press up/down set the valve to “-50”.

The lower limit: for example “-20”, press “Mode” screen display “H1-1”, press up/down set the valve to “-50”.

Note: if the lower limit value smaller than the upper limit, pressure switch will display pressure “DOWN” error message.

3. Lock button:

After setting value, press “Mode” and “down” keys together till screen displays “LOCK, ON”. This operation is preventing error change pressure value.

4. Remove lock button:

Press “Mode” and “down” keys together till screen display “LOCK, OFF”.

2.4.4 SMC Digital Pressure Switch Setting

1. Press “S” for 2 seconds till screen displays “F**”, use up/down keys to select “F0”, press “S” into “unit selection mode”, use up/down keys to select “PA”, press “S” complet setting and back to “function selection mode”, screen displays “F0”.
2. Press up/down till screen displays “F1”, press “S” into “OUT1 specifition setting”, and use up/down keys to select “HYS”, press “S” into “out mode setting”.
3. Use up/down keys to select “L-n”, press “S” into “pressure setting”.
4. Use up/down keys to set pressure to “-50” (the value can be changed according to application, usual the value is “2”). Press “S” into “displayed color of the main display selection”.
5. Use up/down keys to select “Sor”, press “S” back to “fuction selected mode”.
6. Press “S” for 2 seconds back to “measurement mode”.

2.5 Robot and IMM Interface

ST3/5-S series robots are available with 2 different interface versions to communicate with the injection molding machine:

●Euromap67

●Euromap12

Both versions are described in the following chapters.

2.5.1 Euromap67Interface

Euromap67 interface defines the connection plug between the injection molding machine and the robot:

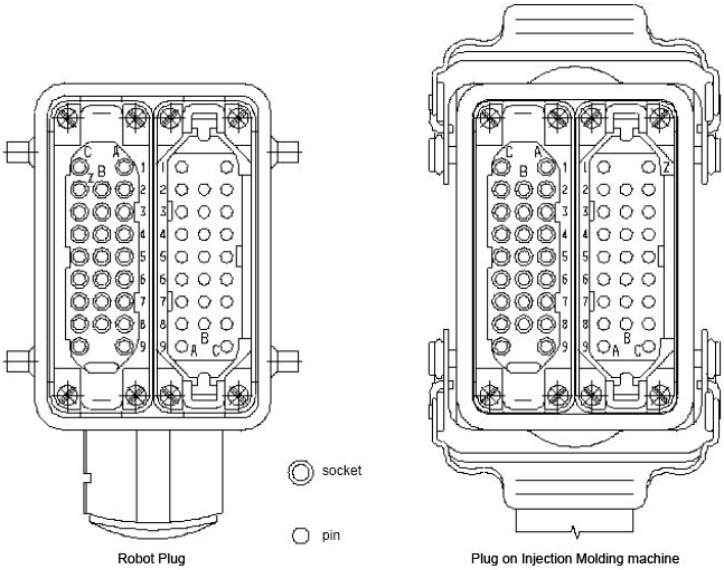

The robot-injection molding machine interface is designed according to the directives of Euromap67, which states:

Unless otherwise noted, the signals, which are maintained during the described function.

2.5.1.1 The Injection Molding Machine Output Signals

Contact No.	Function
ZA1 ZC1	**Emergency stop channel 1** The emergency stop switch of the injection molding machine is used to interrupt the emergency stop circuit of the robot.
ZA2 ZC2	**Emergency stop channel 2** The emergency stop switch of the injection molding machine is used to interrupt the emergency stop circuit of the robot.
ZA3 ZC3	**Safety system active channel 1** For protecting against hazardous motions of the robot. The switch is closed when the safety system of the injection molding machine is active.
ZA4 ZC4	**Safety system active channel 2** For protecting against hazardous motions of the robot. The switch is closed when the safety system of the injection molding machine is active.
ZA5 Optional	**Reject** The signal is HIGH when the molded piece is a reject. The switch is closed when the tool is open and must remain HIGH at least until “close tool enabled” (see pin contact No.A6).
ZA6	**Mold closed** HIGH signal when tool closing has been completed, the signal “close tool enabled” is no longer necessary (see pin contact No.A6).
ZA7	**Mold open** HIGH signal if the mold opening position is equal or more than the required position. Inadvertent alteration to mold opening stroke smaller than that required for the robot

	to approach must be impossible.
ZA8 Optional	**Mold at intermediate position** HIGH signal when the mold opening has reached the specified intermediate position and remains HIGH until the mold is completely open. the signal may be used in two ways: 1) The mold stops in the intermediate position, whereupon a signal is sent to the robot. Complete opening of the IMM takes place through the signal “complete mold opening enabled” (see pin A7). 2) The IMM transmits the signal, but does not remain in the intermediate position. Signal is LOW when the intermediate.
ZA9	**Signal voltage robot 24V DC**
ZB2	**Fully automatic mode injection molding machine** HIGH signal, when operating the injection molding machine tighter with the robot is possible.
ZB3	**Ejector back position** HIGH signal when the ejector is back, regardless of the position of the movable tool plate. The signal acknowledges ”ejector back enabled” (see pin contact No.B3).
ZB4	**Ejector forward position** HIGH signal when the ejector is forward. The signal acknowledges “ejector forward enabled “(see pin contact No.B4).
ZB5	**Core pullers 1 free for robot to approach** HIGH signal when the core pullers are in position for removal of the injection moiling.(see pin contact No.B5)
ZB6	**Core pullers 1 in position to remove molding** HIGH signal when the core pullers are in position for removal of the injection molding.(see pin contact No.B6)
ZB7 Optional	**Core pullers 2 free for robot to approach** HIGH signal when the ejector is back ,regardless of the position of the movable tool plate, are in position for the robot to approach.（see pin contact No.B7）
ZB8 Optional	**Core pullers 2 in position to remove molding** HIGH signal when the core pullers are in position for removal of the injection molding.(see pin contact No.B8)
ZC5/ZC6/ZC7	Reserved for future Euromap signal
ZC8	Free
ZC9	Signal ground robot 0V

2.5.1.2 Robot Output Signals

Contact No.	Function
A1 C1	**Emergency stop of robot channel 1** Opening of the switch contacts of the robot must shut off the control system of the molding machine.
A2 C2	**Emergency stop of robot channel 2** Opening of the switch contacts of the robot must shut off the control system of the molding machine.
A3 C3	**Mold Ares Free** Signaling is effected by the limit switch at the travel –in rail .the switch is opened when the travel –in rail, in the region of the injection molding machine, leaves its starting position before it is moved into the tool area. If the switch is open, neither a closing nor opening motion of the tool may take place. Even when the control system of the robot is shut off, the switch must work as described.
A4	Reserved for future Euromap signal.

C4	
A5	Free
A6	**Complete mold opening enabled** HIGH signal when the robot is far enough out of the tool that it can be closed and when other robot control systems enable closing of the tool .the signal remains HIGH signal for the duration of the tool –closing operation, in the event of a LOW signal due to a disturbance, the tool-closing motion must be absorbed. Note: the signal “close tool enabled” may not be linked with other or signals in any operating mode.(see pin contact No.ZA47)
A7 Optional	**Complete mold opening enabled** HIGH signal when the robot is far enough out of the tool that it can be closed and when other robot control systems enable closing of the tool .the signal remains HIGH signal for the duration of the tool –closing operation, in the event of a LOW signal due to a disturbance, the tool-closing motion must be aborted. Note: the signal “close tool enabled” may not be linked with other or signals in any operating mode.(see pin contact No.ZA47)
A8	Reserved for future Euromap signal
A9	Signal ground IMM 24V DC
B2	**Robot operation mode** LOW signal when the robot mode switch is “operation with injection molding machine”, HIGH signal when the robot mode switch is “no operation with injection molding machine” HIGH signal when the robot is switched off.
B3	**Ejector back enabled** HIGH signal when the removal operation has been performed far enough for the motion “ejector back “to be carried out. the signal is HIGH for the duration of the motion “ejector back “.the signal must be maintained at least until the signal “ejector back “from the molding machine(see pin contact No.ZB3).
B4	**Ejector forward enabled** HIGH signal when the removal operation has been performed far enough for the motion “ejector back” to be carried out. the signal is HIGH for the duration of the motion “ejector back “.the signal must be maintained at least until the signal “ejector back “from the molding machine(see pin contact No.ZB4).
B5 Optional	**Enable movement of core pullers 1 to position for the robot to approach freely.** HIGH signal when the motion of the core pullers is to the position for the robot to approach freely is enabled. (see pin contact No.ZB5)
B6 Optional	**Enable movement of core pullers 1 to position for removal of the molding.** When the motion of the core pullers is to the position for removal of the molding is enabled.
B7 Optional	**Enable movement of core pullers 2 to position for the robot to approach freely.** HIGH signal when the motion of the core pullers is to the position for the robot to approach freely is enabled. (see pin contact No.ZB7)
B8 Optional	**Enable movement of core pullers 2 to position for removal of the molding.** When the motion of the core pullers is to the position for removal of the molding is enabled. (see pin contact No.ZB8)
C5 C8	Free
C6 C7	Reserved for future Euromap signal
C9	Reserved for future Euromap signal

2.5.2 Euromap12 Interface

The interface consists of the plug connection between the injection molding machine and the robot:

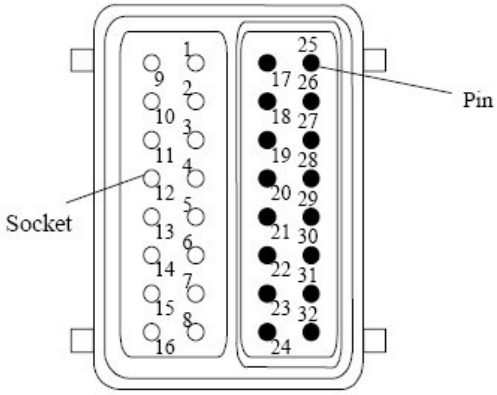

The robot-injection molding machine interface is designed according to Euromap12, which state:

Unless otherwise noted, the signals are maintained during the described function.

2.5.2.1 Injection Molding Machine Output Signals

Plug Contact No.	Function
1，9	**Emergency stop of machine** The emergency stop switch of the injection molding machine is used to interrupt the emergence stop circuit of the robot.
2	**Mold open** The switch contact (pin contact 16) is closed when mould opening position is equal or more than required position. Inadvertent alteration to mould opening stroke smaller than that required for the handing device to approach must be impossible.
3，11	**Safety system active** The switch contact is closed when safety devices (e.g. safety guard, footboard safety, etc.) on the injection molding machine are operative so that dangerous movements of the handing device/robot are possible. The signal is active in any operation mode.
4	**Ejector back** The switch contact is closed when the ejector has been retracted regardless of the moving platen position. (See pin contact No.16) acknowledgement f or the “Enable ejector back” signal (see pin contact No 21), when the ejector sequence is selected. (see pin contact No.16)
5	**Ejector forward** The switch contact (see pin contact No.16) is closed when the ejector has been advanced. The signal is the acknowledgement signal for the “enable ejector forward” (see pin contact No 22). It is recommended to close the switch contact when the ejector sequence not in use. (see pin contact No.16)
6	**Core pullers free for robot to travel in**

Optional	Switch (see pin contact No.16) is closed when the core pullers, regardless of the position of the movable tool plate, are in position for free travel –in of the robot.
7 Optional	**Core pullers in position for removal of injection moldings** Switch (pin contact No.16) is closed when the core pullers are in position for removal of the injection molding.
8 Optional	**Reject** Switch (see pin contact No.16) is closed when the molded piece is a reject. the switch must be closed when the tool is open and must remain closed at least until “enable mould close” (see pin contact No.17)
10	**Fully automatic mode injection molding machine** Switch (see pin contact No.16) is closed when the operating mode selector switch is on “semi-automatic” or “fully automatic mode”.
12	**Mold closed** Switch (see pin contact No.16) is closed when the mould closing has been completed, the signal “enable close” is no longer necessary. (see pin contact No.17)
13 Optional	Free
14 Optional	**Mold at intermediate position** Switch (see pin contact No.16) is closed when the IMM has reached the specified intermediate position and remains closed until the IMM is completely open .the signal may be used in two ways: 1) Mould opening stops on intermediate position and gives start signal to handling device/robot. mould opening restarts with the signal ”Enable full mould opening”(see contact No.28) 2) Mould opening doesn’t stop on intermediate position, however gives the signal to handling device/robot. (see pin contact No.16) The switch contact is open when intermediate mould opening position is not in use.
15 Optional	Free
16	Signal voltage of robot

2.5.2.2 Robot Output Signals

Contact No.	Function
17	**Enable mould close** The switch contact (see pin contact No.32) is closed when the robot is retracted enough for start of mould closure. the switch contact must remain closed at least until “mould closed” (see pin contact No.12)
18，26	**Mould area free** The switch contact is closed when the robot is retracted enough for start of mould closure. If the switch contact opens as a result of a fault, mould closing must be interrupted. The switch contact must be closed if the robot is switch off. It is recommended to close the switch contact when the robot is unselected.
19，27	**Emergency stop of robot** Opening of the switch contacts of the robot must shut off the control system of the molding machine.
20	**Operation with robot** The switch contact (see pin contact No.32) is open when the robot mode switch is “Operation with injection molding machine”. The switch contact is closed when the handling device mode switch is: “No operation with injection molding machine” the

	switch contact (see pin contact No.32) is closed when the robot is switched off.
21	**Enable ejector back** The switch contact(see pin contact No.32) is closed when the handling device enables the movement for ejector back, the switch contact must remain closed at least until : “Ejector back” signal is given by injection molding machine(see contact No 4)
22	**Enable ejector forward** The switch contact (see pin contact No.32) is closed when the handing device enable the movement for ejector forward. the switch contact must remain closed at least until “ejector forward” signal is given by the injection molding machine(see contact No 5)
23 optional	**Enable motion of core pullers for removal of injection moldings** The switch contact (contact no. 32)is closed when the enable motion of core pullers for removal of injection moldings It is recommended that the switch contact remains closed at least until “the core back to end” signal is given by injection molding machine(see contact No 7)
24 optional	**Enable motion of core pullers for removal of injection moldings** The switch contact (contact no. 32)is closed when the enable motion of core pullers for removal of injection moldings It is recommended that the switch contact remains closed at least until “the core back to end” signal is given by injection molding machine(see contact No 7)
25	Reserved for future use by EUROMAP
28 optional	**Enable full mould opening** The switch contact (see pin contact No.32) is closed when the handling device has taken the part and allows to continue mould opening. The switch contact must remain closed until “mould open” signal is give by the injection molding machine (see contact No 2). If the switch contact is not used it must be open.
29	Reserved for future Euromap signal
30	Free
31	Free
32	Voltage of IMM

3. General Description

3.1 ST3/5-S Abstract

The ST3/5-S series robot is designed for rapid and precise removal of products from injection molding machine, and place them at desired locations. ST3-S robots are suitable for hor runner system; ST5-S robots are suitable for 2-plate mold and 3-plate mold.

Model: ST3-S

Model: ST5-S

3.2 Features

1. Compact structure and streamlined appearance.
2. I/O circuit using quick plug-in design, and easy to install and maintain.
3. The limit positions with safety switches, high security.
4. With stack function.
5. Pick the objects up quickly, put the objects down slowly. It will not affect the speed, but also ensure that goods will not be bumps.
6. Humanization control system, easy to operate.
7. Wrist packageing designs, which can save the packaging room, avoid damage during transportation.

3.3 Function

3.3.1 Function Description

ST3/5-S series robot is mainly used for injection molding product an the sprue removed. ST3-S robot suitable for hot runner system. ST5-S robot suitable for 2-plate mold, 3-plate mold and hot runner system. There are limit sensors on every axes' limit position. Every axis driven by servo, run fast and precise position. There is limit sensor switch on the limit position of axes, make sure work safety.

3.3.2 Malfuction Protection

The product has both mechanical and electrical limit protection to prevent any accident due to improper operation.

3.3.3 Continuous Path

The axes of this series robots can work at the same time, can short the working cycle period.

3.3.4 Sel-protection

The axes of this series robots driven by servo, can avoid damages when the power off suddenly, the arm drop down.

3.3.5 Emergency Stop

There is the emergency stop button on the hand controller. When the

emergency stop button is pressed, the robot will stop working. The gripper and vacuum vales and the vacuum pump are not disconnected, to avoid dropping parts from the gripper. In addition, the hand controller will remain under power to allow indication of error messages. If robot goes wrong or need to maintenance, press the emergency stop button to ensure operation safety.

3.4 Default Setting

1. The traverse speed is at 85% of the full speed.
2. The pressure sensor switch is at 4bar, when air pressure is less than 4bar, the machine will stop working and alarm.
3. The filter valve is at 6bar.
4. The vacuum pressure sensor is at -60.

3.5 ST3/5-S Robot Reversing

The following paragraph is the instruction for changing ST3/5 robot dropping side (Operation side to non-operation side). For safety, please turn off the electrical power and pneumatic supply before operating.

1. Unscrew the proximity sensor X103 and move it up to the same level as X102, then screw X103. Unscrew the proximity sensor X102 and move it down to the same level as where X103 was, and then screw X102. See picture 3-1, picture 3-2.

Picture 3-1: Sensor position before modified

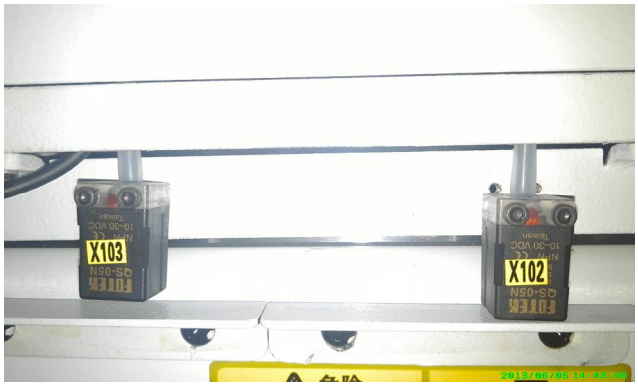

Picture 3-2: Sensor position after modified

2. Move all “Outside IMM safety zone blocks” from the end of the beam to another end of the beam, see picture 3-3, 3-4.

Picture 3-3: Outside IMM safety zone blocks before modified

Picture 3-4: Outside IMM safety zone blocks after modified

3. Move the origin block from the end of the beam to another end of beam, 180mm away from the fixing blet block. See picture:

4. Open the sliding seat on the Z-axis, and then exchange the X101 and X104 socket positions on U2 board, exchange the X102 and X103 socket positions. See picture 3-5 and 3-6.

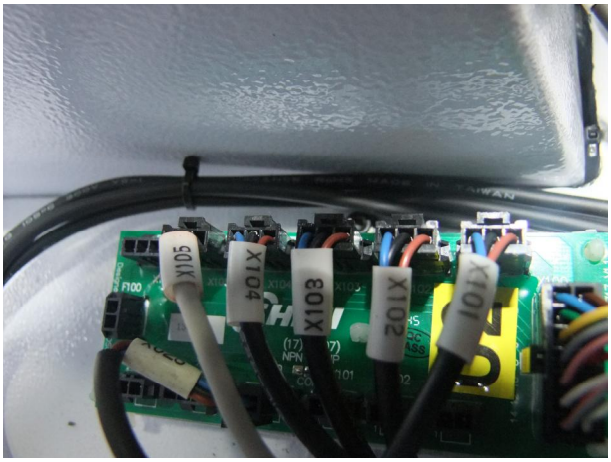

Picture 3-5: Before modified

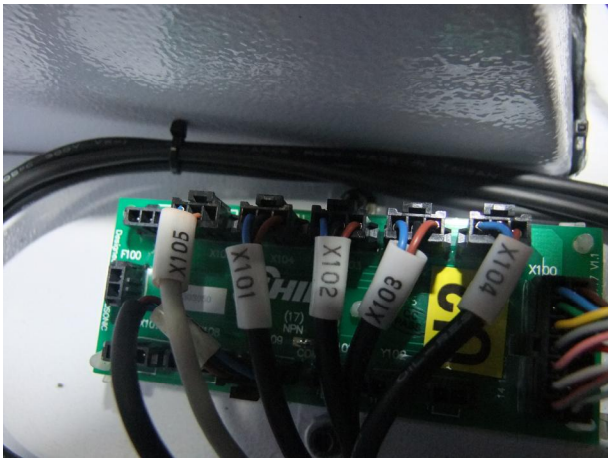

Picture 3-6: After modified

5. Change robot direction to reverse in hand controller. See picture 3-7, 3-8.

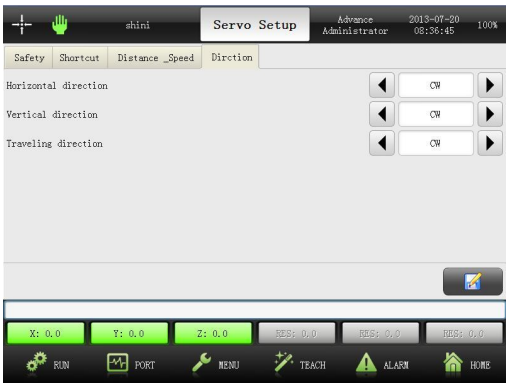

Picture 3-7: Direction Before Modified

Picture 3-8: Direction After Modified

6. Horizontal rotate robot base 180 degree and move to the other end of beam then tighten it.
7. Robot reversing result checking. Press “home position”, robot will move reverse. After robot back to home position, Z-axis home position sensor(X103) light up. When robot running, limit sensor light up.

4. Operating Instruction

4.1 Hand Controller

F1: Reference/home position. Press F1 and safety switch, robot will reference.

F2: Stop. In auto running mode, press F2, robot stop auto running and switch to manual mode.

F3: Auto. When function button switch to “AUTO”, press F3 robot will begin auto running. Note: before stopping auto running, please stop IMM firstly. Before starting auto running, please start IMM firstly.

F4: Spare button.

F5: Spare button.

F6: Cylinder rotates manually. Robot in manual mode, touch F6, cylinder rotates horizontal / vertical.


Vacuum 1: Robot in manual mode, press this button, vacuum 1 on or off.

 Vacuum 2: Robot in manual mode, press this button, vacuum 2 on or off.

 Grip 1: Robot in manual mode, press this button, grip 1 on or off.

 Grip 2: Robot in manual mode, press this button, grip 2 on or off.

 Grip 3: Robot in manual mode, press this button, grip 3 on or off.

 Grip 4: Robot in manual mode, press this button, grip 4 on or off.

 Emergency stop button: Press this button, robot stop immediately, screen displays emergency stop error message.

 Function button: Switch to “AUTO”, robot into auto stand-by page. Switch to “STOP”, if robot in auto running, robot will stop running and into auto stand-by page, and robot can not manually move. Switch to “MANUAL”, robot into manual mode, each axis can move manually.

4.2 Main Screen

The main screen displays the system status and the operations, easy for operation. The flowing is the details of main screen.

After power on, the system autos into main screen, see as the picture:

ST3-S Main Screen

① Title Bar: display the current system screen, status, current program name, user, date, time and so on.

②Alarm Message: display the last alarm message.

③Servo Position: display the current position of servo motor, touch it and toggle the screen to servo control page.

④Function Key: touch it and into function menu page.

4.3 Menu Title Bar

j k l m n o p

①Servo reference position: feedback the servo motor reset conditions (reset home position, reference). Touch it servo motor will reset home position.

	No reference position: after power on, the servo motor without home position reset.
	Reference position: after power on, the servo motor had home position reset.

②Operation mode symbol: display current operation mode.

	Manual mode: current system allows manually operation.
	Auto stand-by mode: auto running, one cycle running and one step running.
	Auto mode: auto running current program.
	One cycle running: auto running current program in one cycle.
	Single-step running: running current program in one step.

③qwe: display current program name. If no program running, it displays “no program”. Touch it and into program control page.

④Main Screen: current screen.

⑤Operator: display current user. There are 4 levels user: operator, advanced operator, administrator, advanced administrator. Touch it and into user control page.

⑥Date and time: display current date and time. Touch it and into date and time page.

⑦Speed: display the robot running speed, touch it into speed setting page.

4.4 Function Menu

RUN	**system running page** Auto running, one cycle running, and one-step running operation.
PORT	**watch page** Watch the I/O port status, allows manually operate of I/O in manual mode.
MENU	**function menu page** Setup the parameters of system and servo motor, user interface and so on.
TEACH	**teach page** Running new teach program and setting current parameters.

	**alarm page** Alarm message (current and recent) details, convenient for malfunction analysis.
	**home page** Touch it and system back to home page.

5. User Management

5.1 User Level

Total 4 levels:

- **Operator:** default user level, login without password. This level just enables to reset 0-position, auto running, watch I/O and some basic operations.
- **Advance operator:** login needs password and it can be modified. Beyond the operator level operations, the advanced operator can execute manual operation, loading current program and so on.
- **Administrator:** login needs password (password: 88888888) and it can be modified. Allow executing all operations, except the special operations for system manufacturer.
- **Advance Administrator:** login needs password, the highest user level. This is for manufacturer to manage and update system.

The flowing is the operations for each level user. "√"stands for authorities, "×" stands for no authorities.

Allowed Operation	Operator	Advance Operator	Administrator	Advance Administrator
reset 0-position	√	√	√	√
loading current program	×	√	√	√
program management	×	×	√	√
modify system date and time	×	×	√	√
manually operate servo	×	√	√	√
operate program	√	√	√	√
others manually operate	×	√	√	√
teach program	×	×	√	√
system parameter	×	×	√	√
signal configuration	×	×	√	√
reset system parameter	×	×	√	√
servo safety parameter	×	×	√	√
servo machine parameter	×	×	√	√
user interface	×	×	√	√

machine position operate	×	×	√	√
manufacturer management	×	×	×	√
system update	×	×	×	√

5.2 Login

Touch current user name on title bar in to “User Manager” page, first page is login.

1) **Select User**: select user to login. Advance operator, administrator, and advance administrator can be selectable, because the operator login no needs password.
2) **Input Password:** input user level password.
3)  : Confirm, touch and acknowledge the user login.
4)  : delete, touch and cancel user login, the screen back to last page.
5)  : log out, touch it the system back to default user (operator) level.

5.3 Modify Password

The second page of “User Manager” is modify password.

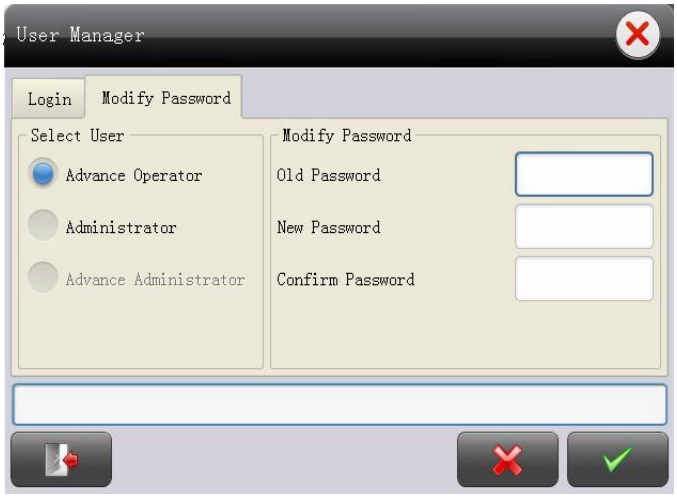

1) **Old Password:** input old password.
2) **New Password:** input new password.
3) **Confirm Password:** input the new password once again.

5.4 Input Password

The password can be 1 to 8 characters, including numbers, capital letters and lowercase letters. Touch input password box, the virtual keyboard will appear on the screen, see as the flowing:

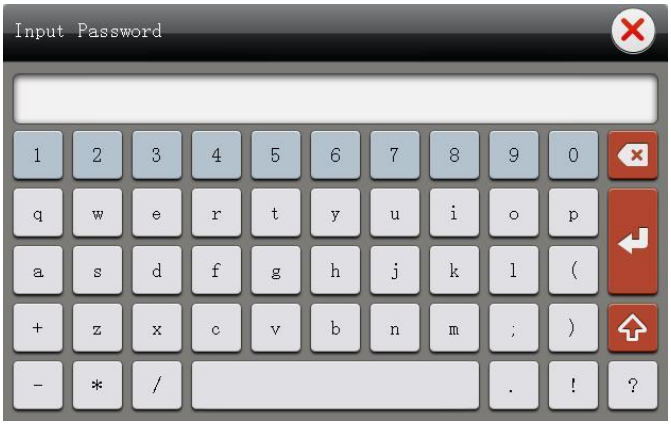

1) Display password: display input password, 1 (at least) to 8 (at most) characters.

2)  : backspace, delete one character before cursor.

3)  : confirm, acknowledge the password.

4)  : shift, shift the capital letters and lowercase letters.

6. System Program Management

6.1 Introduce

Touch current program name on the title bar into programs page. The program can be saved in system or USB memory. User can switch save storage in program.

Programs page, see as the picture:

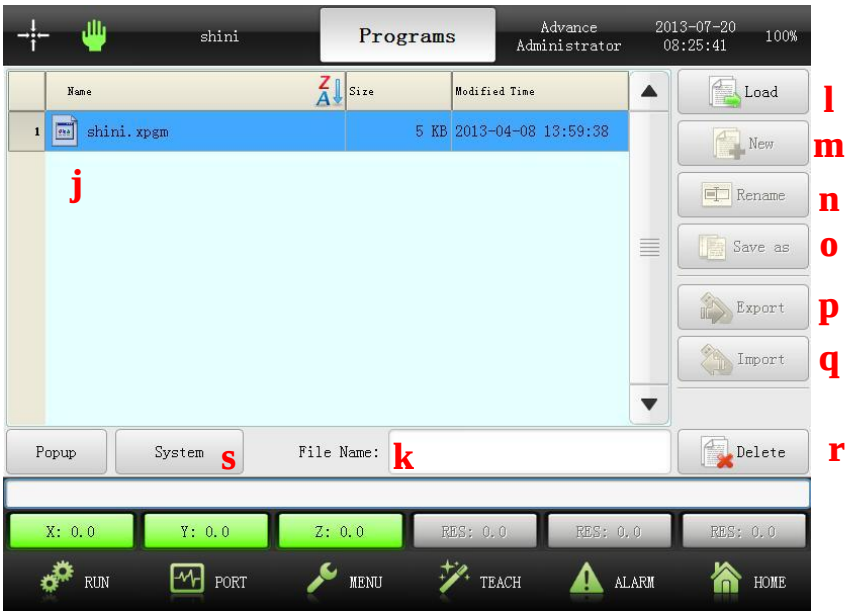

①**Name:** display all system programs name.

②**File Name:** input new name when create new program, rename and save as program.

③**Load:** loading the selected program as the current program.

④**New:** create new program.

⑤**Rename:** rename the selected program.

⑥**Save as:** copy the selected program and save as the new program name.

⑦**Export:** export selected program to USB memory.

⑧**Import:** import selected program in USB memory to system storage.

⑨**Delete:** delete the selected program.

⑩**System/USB Memory:** display program storage in system or USB memory. Touch and shift the locations between system and USB memory.

storage location	instruction
system storage	Programs storage in system, touch it and shift to USB memory.
USB memory storage	Programs storage in USB memory, touch it and shift to system storage.

6.2 Export Program

Export program from system to USB memory, the steps as flowing:

1) Plug in USB memory.
2) Shift to system storage.
3) Select the program in system, for example: Test2.
4) Input new name for selected program, for example: UTest2.
5) Touch “export”, copy Test2 to USB memory and named as UTest2.
6) Touch “popup”.
7) Unplug USB memory, complete export.

6.3 Import Program

Import program from USB memory to system, the steps as flowing:

1) Plug in USB memory.
2) Shift to USB memory storage.
3) Select the program in USB memory, for example: UTest3.
4) Input new name for selected program, for example: Test3.
5) Touch “import”, copy UTest3 to system and named as Test3.
6) Touch “popup”.
7) Unplug USB memory, complete import.

7. System Date and Time

Touch Date and Time on the title bar into modify page.

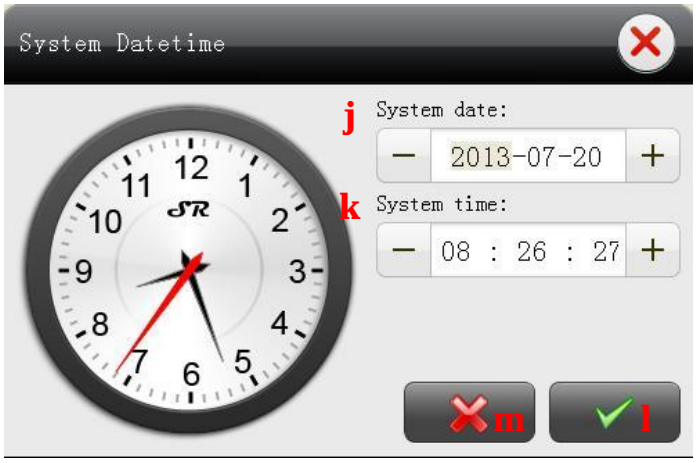

①System date: touch the date, “+” for plus, “-” for minus.

②System time: touch the time, “+” for plus, “-” for minus.

③  : confirm, save and acknowledge the date and time.

④  : delete, give up to modify date or time, back to last page.

Date form: year-month-date, the earliest date in the system is January 1, 2000.

Time form: hour-minute-second, 24 hours in one day.

8. Manually Operate

8.1 Manual Enable Switch

The hand controller with manual switch, avoid improper use and injure personnel or damage the robot, mold or molding machine. Please ensure the manual switch had been press down during manually operations.

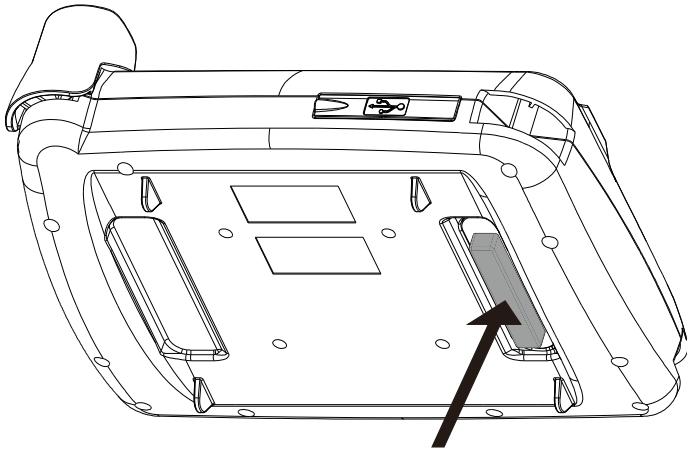

3 positions enable switch

8.2 Servo Home Position Setting

In manual mode, press the manual enable switch, then touch  , servo returen to home position.

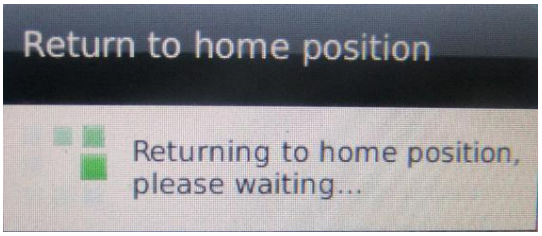

During servo return to home position, please do not touch the manual enable switch, or the servo will stop return to home position.

8.3 Servo Setting

In manual mod, touch servo symbol into servo setting page. Ensure the servo had returned to home position or the servo control page can not be login.

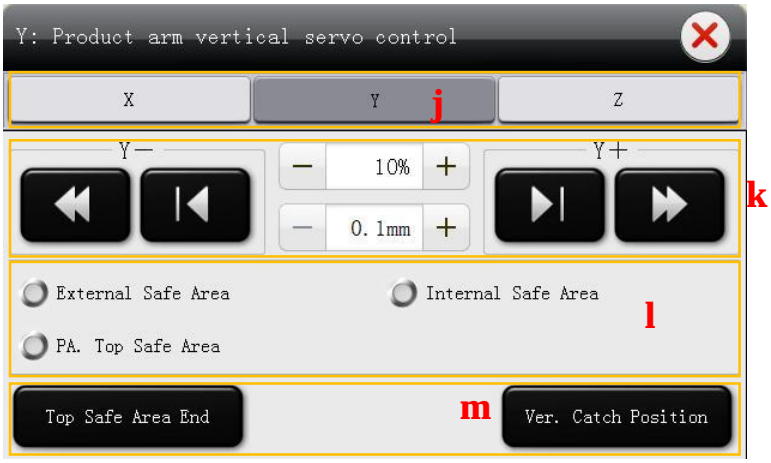

①Servo axis: select the servo axis, for example choose Y as sertvo axis, touch Y into setting page.

②Servo Control: control servo in plus or minus, speed, displacement manually.

	**servo operating in plus/minus** Press the button, servo operating in plus/minus. Press again, servo stops operating.
	**tunning servo in plus/minus** Press the button, tunning the servo operating value in plus or minus.

③Safety signal: display servo operating areas: external safe area, internal safe area, PA. (main arm)top safet area.

④Position shortcuts: servo quickly moves to desired position. Position shortcuts vary of the servo axes.

Servo axis	Position Shortcuts 1	Position Shortcuts 2
X-axis	safe area starting in mold	safe area endpoint in mol
Y-axis	mold top stand-by area end	catch position in mold
Z-axis	traverse to catch position	traverse to placement postion

Servo position shortcut details see as the **chapter 11.3.3**.

Note: ensure manual enable switch had been pressed down when manually seting servo. During seting servo do not touch the manual enable switch.

8.4 Port Monitor Setting

In manual mode, on main screen page, touch “port monitor” into setting page. Setting port output including: pneumatic, IMM, servo, ext. output and ext.input. Setting pneumatic, see as the picture:

Touch symbol to on or off port:

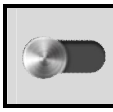	**OFF** Touch and on the port.

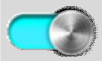	**ON** Touch and off the port.

Note: before touch the ON or OFF port, please ensure the manual enable switch had been pressed down.

9. Program Setting

Touch program operating into “Run Control” page. Set current programs in manual, auto, cycle or step.

Program setting see as the picture:

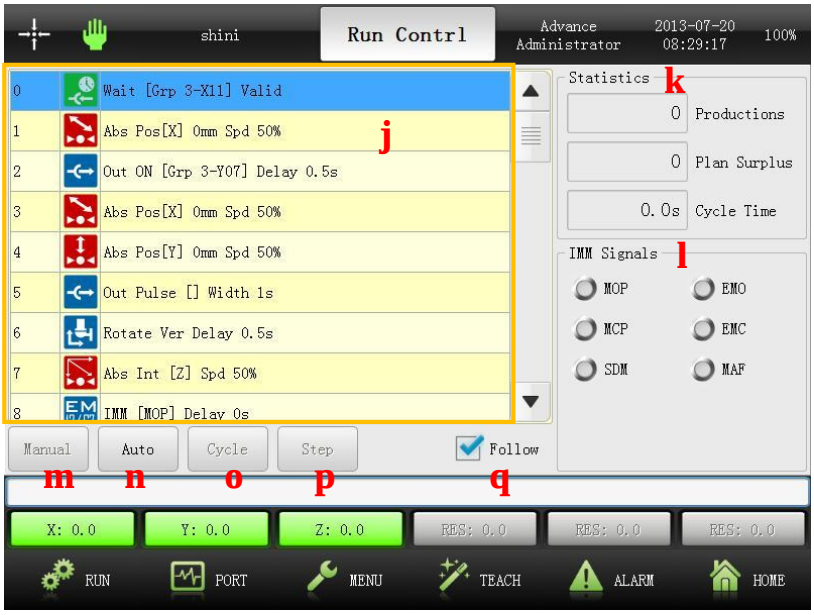

① Current programs order list: the list of current programs.

② Statistics: display auto program running messages.

- **Productions:** the numbers of finished products in auto program running.
- **Plan Surplus:** the numbers of target plan.
- **Cycle Time:** one cycle in auto program.

③ IMM Signals: display the signals of IMM.

④ Manual: in stand-by mode, touch Manual and the system into manual mode. In auto mode, touch Manual and the system will stop auto running and into stand-by mode.

⑤ Auto: in manual mode, touch Auto and the system into auto stand-by mode. In auto stand-by mode, touch Auto and the system into auto running mode.

⑥ Cycle: in auto stand-by mode, touch Cycle, after one cycle system will back to auto stand-by mode.

⑦ Step: in auto stand-by mode, touch Step and the system executes current program step by step.

⑧ Follow: in auto running mode, touch Follow, the system will follow current program.

10. Teach Program

Touch “Teach” to modify current programs. In Manual mode into Teach Program, the current programs can execute adding or deleting program orders, adjusting position, editing parameters. In auto mode into teach mode, the current programs only can execute editing parameters.

Teach Program see as the picture:

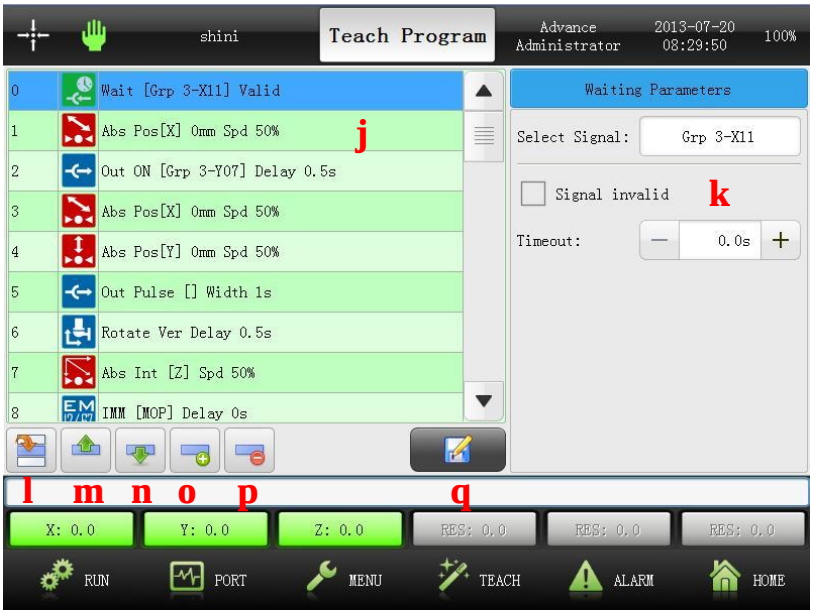

①**Order list:** current program orders list.

②**Position Parameters:** parameters of current order.

③**Position:** touch  order list will roll to current order position.

④  : **Up**, order move up.

⑤  : down, order down to next position.

⑥  : **insert**, insert one new order.

⑦  : **delete**, delete the selected order.

⑧  : **save**, save the modified orders and parameters.

11. Function Page

11.1 Function Menu

Touch **MENU** into function menu page:

1) **System Setup:** setup system parameters, running parameters, signals and reference parameters.
2) **Servo Setup:** setup servo parameters, including each servo axis safety area, stroke and direction.
3) **UI Setup:** setup user interface, parameters, language and screen.
4) **Adjustment:** adjust servo position in low speed, if robot didn't return to home position.
5) **Information:** the messages of system manufacturer.
6) **Software Update:** software update and setup startup screen.
7) **Calculator:** beyond the base functions also with trigonometric function, logarithm, index and so on.
8) **Elec Gear Calculator:** special servo electric gear calculator, easy for installation and adjustment.
9) **System Log:** display operation records and dairy checking.

11.2 System Setup

11.2.1 System Parameter

In function menu page, touch “system setup” into setting page. Total with 3 pages: run, signals and reset.

1) **Run:** setup running system parameters, like production plan, remind number and so on.
2) **Signals:** usage and polarity inversion.
3) **Reset:** reset parameters to default setting, including system, servo, user password and cavity numbers.

After setting, touch “**save**” button to save the modified.

11.2.2 Running Parameter

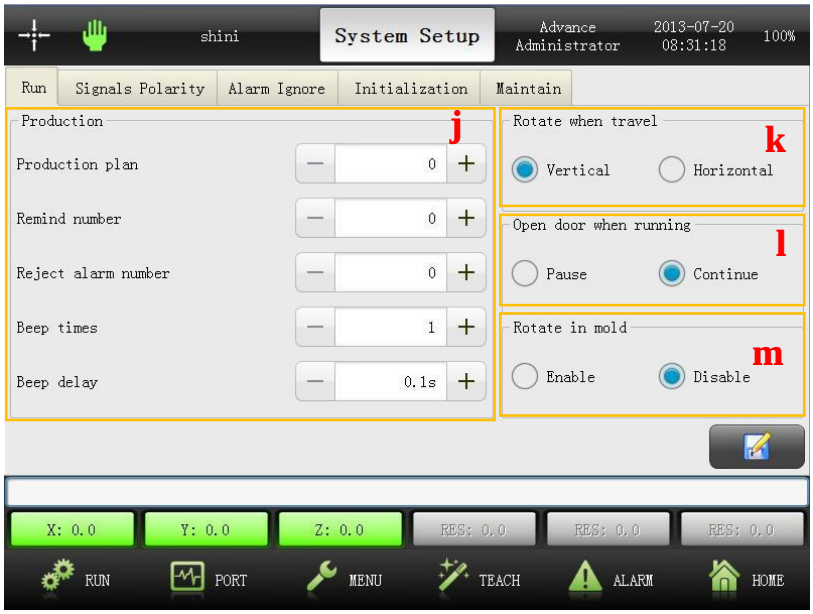

1) **Production:**

1、**Production plan:** product production plan. When getting the planed quantity, the system will stop running and remain have got the quantity. “0” stands for without production plan.

2、**Remind number:** setup remind number. When getting the number, the system will alarm, touch the “auto” or open and close IMM safety door, robot will keep auto running. “0” stands for without remind number.

3、**Reject alarm number:** setup total reject number, over this number, the

system will alarm. “0” stands for without reject alarm.

4、**Beep times:** setup the beep alarm times.

5、**Beep delay:** setup beep alarm delay time.

2) **Rotate when travel:** during robot arm traverse, main arm vertical or horizontal.

3) **Open door when running:** during system running, open the IMM safety door, the system stop or continue running.

4) **Rotate in mold:** enable or disable main arm rotate in mold.

11.2.3 Signals Polarity

Polarity Inversion: for example, touch “Low pressure” for setting low air pressure in minus.

11.2.4 Alarm Ignore

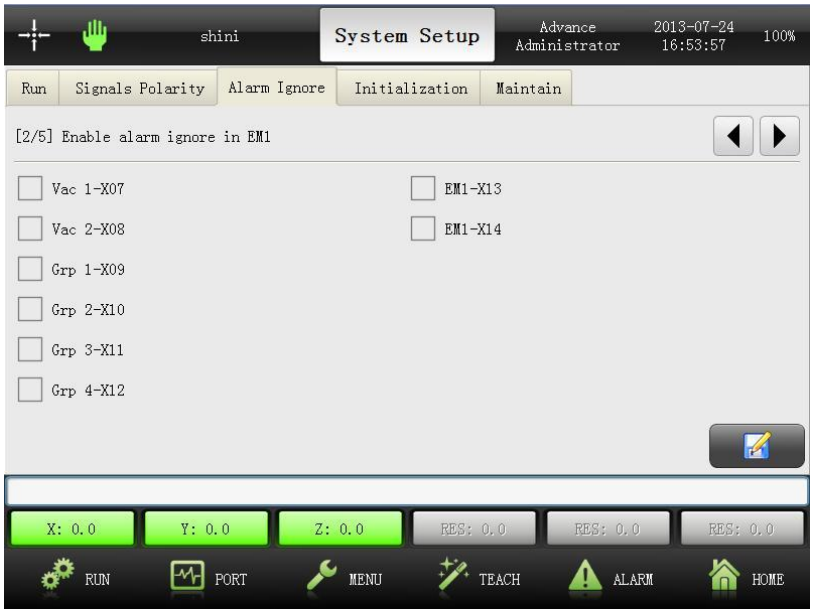

Enable alarm ignore in EM1: extention module 1 enable alarm ignore. For example, touch “Vac 1-07” to ignore it alarm.

11.2.5 Initialization

Select signals use or not use. If use “IMM mold close signal”, please press “IMM MCP”.

11.3 Servo Setting

11.3.1 Servo Parameters

In function menu page, touch servo setup, total with 6 setting, safety, Shortcut, Hor (crosswise axis), Ver (vertical axis), Other and Dir (direction).

1) Safety: setup safety area for each servo axis.
2) Shortcut: quickly locate position for each servo axis in manual mode.
3) Hor: setup parameters of crosswise axis.
4) Ver: setup parameters of vertical axis.
5) Other: setup parameters of traverse axis.
6) Dir: setup directions of each servo axes.

After setting, press “save” to acknowledge and save servo settings.

11.3.2 Safety Setup

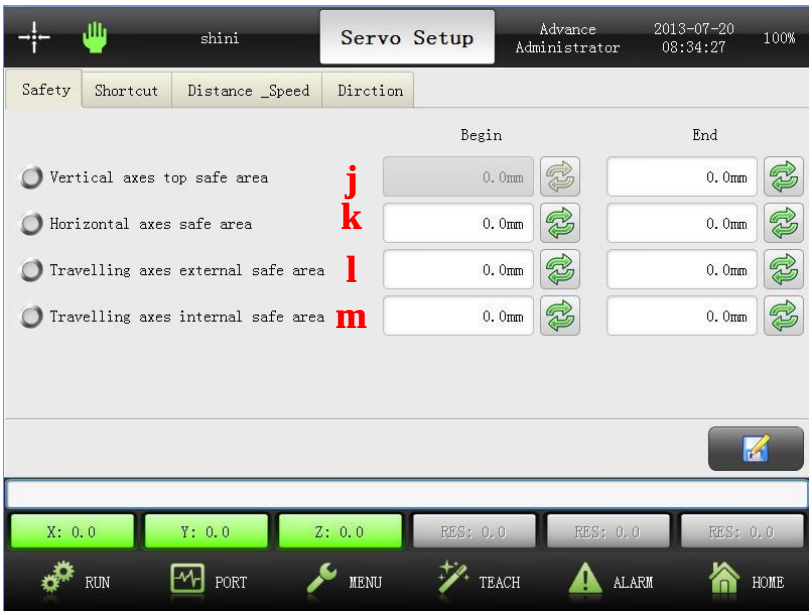

1) **Vertical axes top safe area:** setup main arm down stroke in mold, and this stroke will not influence mold closed. The stroke begins with 0, user can setup safety area end point. Note: during setting safety area, the safety area sensor on main arm must with signal to avoid wrong setting.
2) **Horizontal axes safe area:** setup stroke according to the distance of mold open. The ending point must greater than beginning point. During setting the stroke, the safety area sensor on traverse in mold must with signal to avoid

wrong setting.

3) **Travelling (traverse) axes external safe area:** setup the stroke of traverse placing outside mold. The ending point must greater than beginning point. During setting the stroke, the safety area sensor on traverse outside mold must with signal to avoid wrong setting.

4) **Travelling (traverse) axes internal safe area:** setup the stroke of traverse picking in mold. The ending point must greater than beginning point. During setting the stroke, the stacking sensor on traverse in mold must with signal to avoid wrong setting.

In order to guarantee servo parameters correctness, servo coordinate location cannot input by manual. Manually move servo to desired position, touch synchronous button, then input servo desired position value.

Note: Pay attention to servo axes setup, move extra sensor plates to avoid machine collision.

11.3.3 Shortcut

1) **Travel (traverse) position for catch:** setup traverse position when robot arm down to catch products in mold.

2) **Travel (traverse) position for release:** setup traverse position when robot arm down to release products outside mold.

3) **Product arm vertical postion for catch:** setup vertical arm position when robot arm down to catch products in mold.

11.3.4 Servo Machine Parameter

The following is the step of setting crosswise servo axis, other servo axes setting are the same.

1) **Softare distance:** setup software distance for crosswise servo axis. The software distance limits servo running stroke in manual mode or auto mode.
2) **Speed:** setup running speed for crosswise servo axis, slowest is 1%, fastest is 100%.
3) **Acceleration:** setup accelerated speed for crosswise servo axis, slowest is 1%, and fastest is 100%.
4) **Deceleration:** setup deceleration for crosswise servo axis, slowest is 1%, fastest is 100%.

11.3.5 Servo Direction

Setting servo direction (clockwise and counterclockwise) in this page, see as the picture:

11.4 User Interface Setup

In function menu page, touch UI setup, see as the picture:

1) **Language:** select different langue.
2) **Screensave time:** setup save screen time, 0m stands for no save screen, 30m is the longest time.
3) **Backlight brightness:** adjust backlight of screen, 1 for darkest, 9 for brightest.

4) **Recalibrate the touch screen:** if screen appears error, touch “Recalibrate” button to recalibrate.

5) **Vibration feedback:** selected it, if system alarming, the hand controller will vibrate to remind user.

6) **Key tone:** selected it, press hand controller buttons with sound.

7) **Touch tone:** selected it, touch screen with sound.

8) **Frequency:** 3 levels for key tone/touch tone frequency:

- 1: low
- 2: standard
- 3: high

11.5 Position Adjustment

Control servo running in slow speed in adjustment page, if robot without home position resetting after system starting. If robot with pneumatic arm, user also can remote adjustment of crosswise axis (if robot has position motor).

Servo and pneumatic position adjustment see as the picture:

11.6 Software Updating

In function menu page, touch “software updating” into setting page. This operation belongs to advance administrator.

Setup splash, wallpaper, information. All the pictures should be saved as image format, see as the following table:

image name	size	format	instruction
Splash.png	800×600	png	plash: image of startup screen
Wallpaper.png	800×407	png	wallpaper: image of stand-by screen
Information.png	800×407	png	information: vendor information image displays in system

The system and servo parameter can be export or import though USB port. User can setup lot of parameters for robots.

Software updating see following picture:

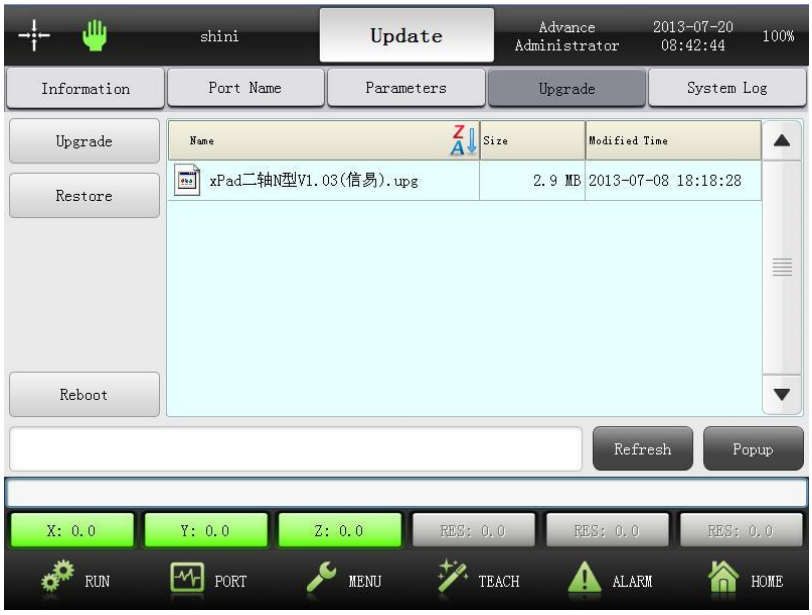

11.6.1 Update Information

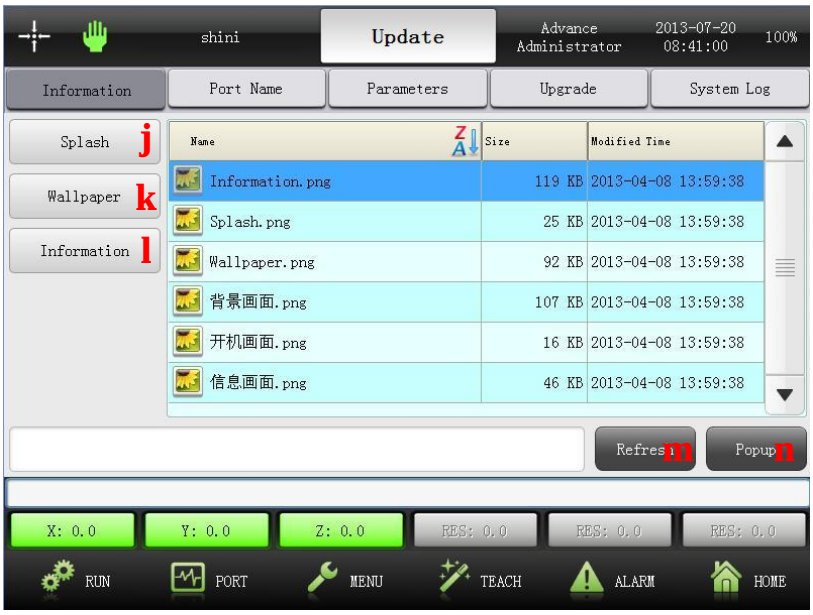

1) **Splash:** import startup screen images from USB memory.
2) **Wallpaper:** import stand-by screen from USB memory.
3) **Information:** import manufacturer information from USB memory.
4) **Popup:** touch “popup” before unplugging USB memory.
5) **Refresh:** touch refresh to search files in USB memory.

11.6.2 Update Port Name

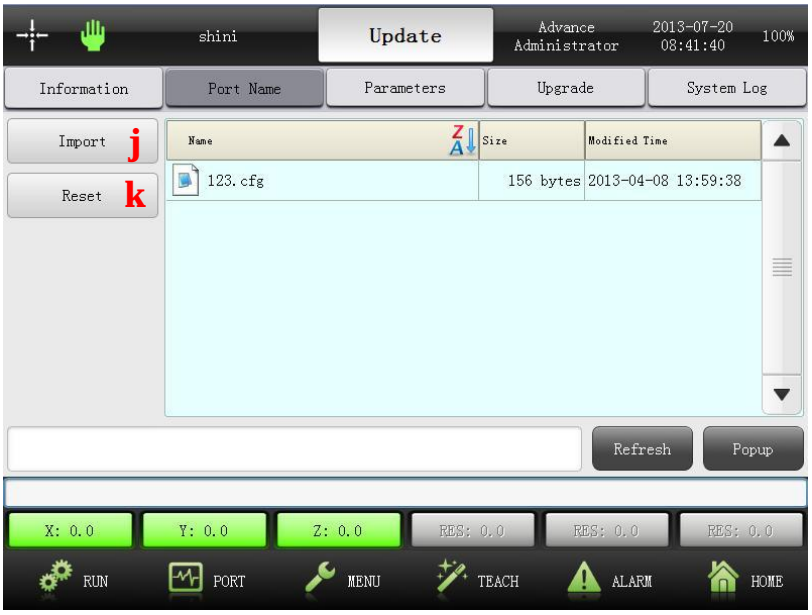

1) **Import:** import file from USB memory and save it as diresed name.

2) Reset: reset the port to initial value.

11.6.3 Update Parameters

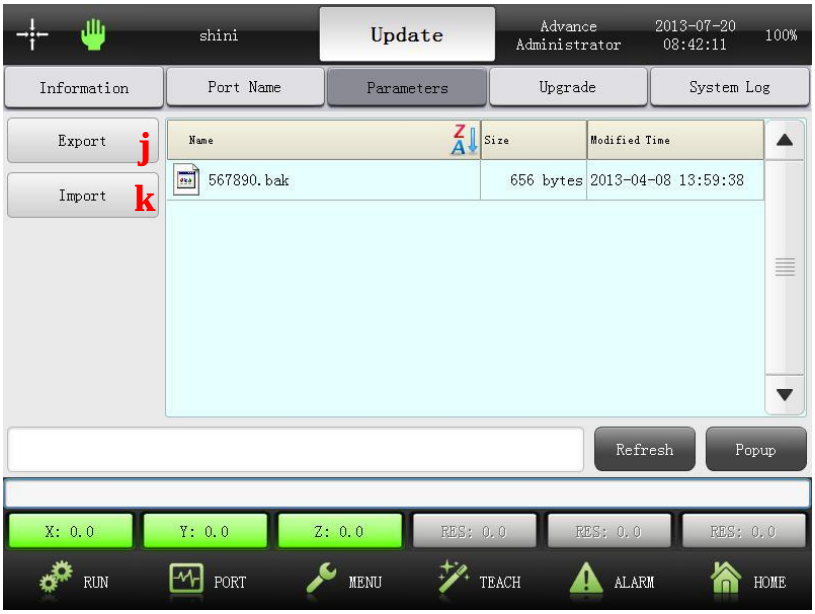

1) **Export:** export system and servo parameters to USB memory.

2) **Import:** import system and servo parameters from USB memory to system.

11.6.4 Update Software

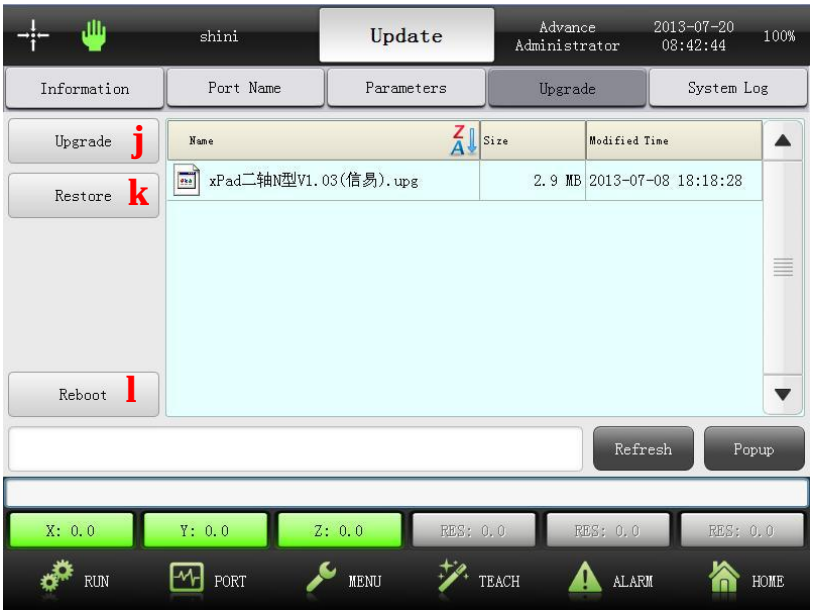

1) **Upgrade:** upgrate system software.
2) **Restore:** restore system software.
3) **Reboot:** reboot system softeware

11.6.5 System Log

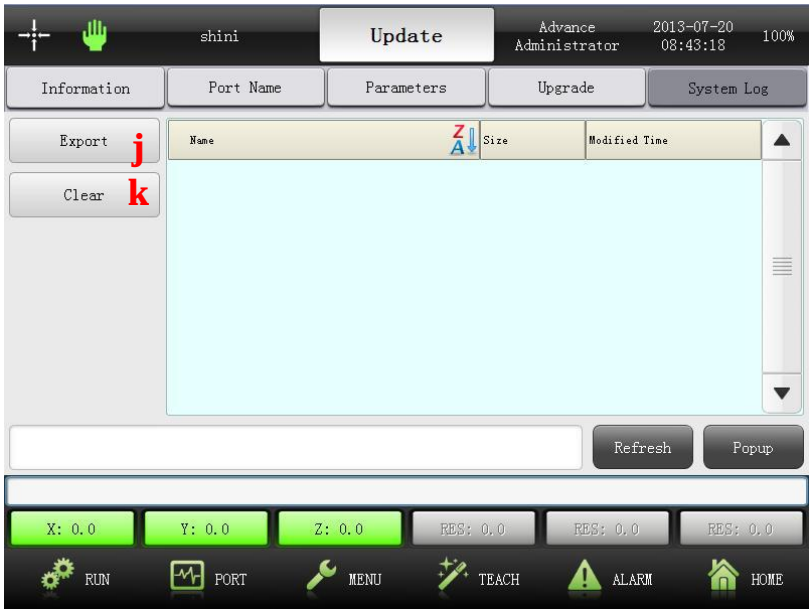

1) **Export:** export system log.
2) **Clear:** clear system log.

The USB memory should be FAT32 forma.

The following are the steps of updating hand controller software:

1) Copy updating files to USB memory
2) Plug USB memory to hand controller
3) Touch “upgrade”
4) After updating, touch “popup”
5) Unplug USB memory
6) Touch “refresh” or turn off power supple, reboot hand controller.

12. Alarm Message

12.1 Current Alarms

Touch “ALARM”, current alarm message displays on first page. Total display 12 messages one page and assort as alarm reasons.

Current alarms message see following picture:

1) **Alarm Sources:** total with 12 alarm sources. If alarming, the signal light will bright to remind. Touch the bright alarm source, alarm details appears at the bottom.
2) A**larm Details:** display alarm sources details.

12.2 Alarm Resume

Alarm resume displays on second page, memory last 300 alarm messages.

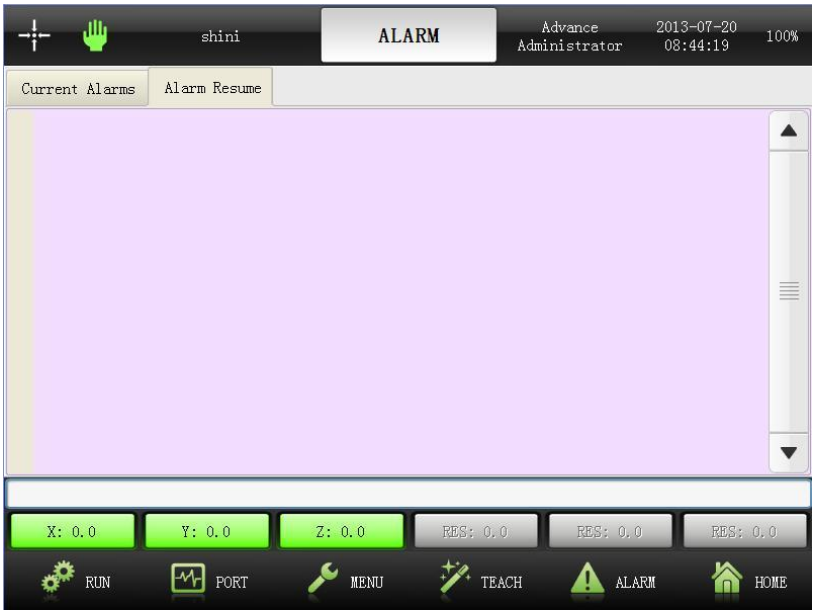

12.3 Alarm Message Instruction

Alarm No.	Alarm Message Detailes
[031]	No IMM auto signal.
[032]	No IMM safety door signal.
[033]	Production plan had been finished.
[034]	Reject exceed in auto mode.
[039]	Disable mold close, sub-arm not in safety area.
[040]	Disable mold close, main arm not in safety area.
[041]	Disable rotate, main arm in mold and down-going.
[042]	Sub-arm cannot down-going, robot not in safety area.
[043]	No “mold open” signal, sub-arm cannot down-going.
[044]	No “medium mold open” signal, sub-arm can not down-going.
[045]	“Vertical arm no “home position” signal.
[046]	Robot cannot into auto mode when outside mold.
[048]	No extension signal.
[049]	Main arm rotate horizontal on home position.
[050]	Main arm rotate vertical on home position.
[052]	Main arm not in home position, servo axis traverse not safety.
[053]	Sub-arm not in home position, servo axis traverse not safety.
[054]	No “mold open” signal, main arm up/down not safety.

[055]	No “medium mold open” signal, main arm up/down not safety.
[056]	Traverse axis not in safety area, main arm up/down not safety.
[057]	Main arm crosswise stroke exceed mold safety area.
[066]	Robot stop auto running, IMM safety door had been opened. Please check the system setting.
[068]	If main arm rotate vertical, it cannot down inside mold.
[069]	Next order: main arm crosswise stroke exceed software distance. The order cannot be excused.
[070]	Next order: main arm vertical stroke exceed software distance. The order cannot be excused.
[071]	Next order: main arm robot traverse stroke exceed software distance. The order cannot be excused.
[072]	Robot arm in mold safety area, but no signal.
[073]	Robot arm outside mold safety area, but no signal.
[074]	Robot arm not in traverse safety area (inside and outside mold), main arm up/down not safety.
[075]	Main arm in safety area, but no signal.
[128]	Main arm rotate vertical, but no signal.
[129]	Main arm rotate vertical, but with horizontal signal.
[130]	Main arm rotate horizontal, but no signal.
[131]	Main arm rotate horizontal, but with vertical signal.
[132]	Sub-arm down-going, but no signal.
[133]	Sub-arm down-going, but with up-going signal.
[134]	Sub-arm up-going, but no signal.
[135]	Sub-arm up-going, but with down-going signal.
[136]	Sub-arm crosswise forward, but no signal.
[137]	Sub-arm crosswise forward, but with backward signal.
[138]	Sub-arm crosswise backward, but no signal.
[139]	Sub-arm crosswise backward, but with forward signal.
[140]	Main arm crosswise servo axis alarm.
[141]	Main arm crosswise servo axis not on position.
[142]	Main arm crosswise servo axis no on position signal.
[143]	Main arm vertical servo axis alarm.

[144]	Main arm vertical servo axis not on position.
[145]	Main arm vertical servo axis no signal.
[146]	Traverse servo axis alarm.
[147]	Traverse servo axis not on position.
[148]	Traverse servo axis no signal.
[149]	IMM emergency stop, please check it.
[150]	Robot emergency stop! The emergency stop button on robot hand controller had been pressed.
[151]	Robot air pressure lower, please check it.
[152]	Sub-arm in mold and down-going, but no “mold open” signal.
[153]	Sub-arm in mold and down-going, but no “medium mold open” signal.
[154]	Main arm in mold and down-going, but no “mold open” signal.
[155]	Main arm in mold and down-going, but no “medium mold open” signal.
[156]	Crosswise servo axis running to forward limit position.
[157]	Crosswise servo axis running to backward limit position.
[158]	Vertical servo axis running to up limit.
[159]	Vertical servo axis running to down limit.
[160]	Traverse servo axis running to traverse in limit.
[161]	Traverse servo axis running to traverse out limit.
[162]	Vertical servo axis at 0-position, but no home position signal.
[163]	Servo motor locate position overtime and hasn’t running to desired position.
[165]	IO extension 1 communication error.
[166]	IO extension 2 communication error.
[167]	IO extension 3 communication error.
[168]	IO extension 4 communication error.

13. Maintenance

13.1 General

Please observe the prescribed maintenance intervals. Proper maintenance ensures trouble-free functioning of the robot. Proper maintenance is necessary in order that the warrantee be fully enforceable.

⚠ Maintenance should be performed by qualified personnel only.

⚠ Maintenance should responsibility for safety equipment becomes the responsibility of the system operator once he accepts the robot.

Please note, in particular, that safety instructions marked with ⚠ must be observed according to regulations so that fully functionality of this equipment can be guaranteed.

13.2 Lubrication Requirements

Remove the old grease from the guide shafts and scraper rings of the bearing using a cloth. Then apply the new grease to the guide shafts using a brush.

As well as all roller bearing greases according to DIN 51825.

13.3 Maintenance Cycle

In accordance with the maintenance cycle, make work in the best way.

Daily Maintenance	Monthly Maintenance	Weekly Maintenance
1. Swab robot. 2. Filter drainage. 3. Check the air pressure. 4. Check bolt connection robot and injection molding machine whether tighten. 5. Check all block settings whether tightened.	1. Use air clean filter. 2. Check the screws on all part whether tightened. 3. Confirm whether the pipelines break or loose. 4. Check and adjust the operating speed.	Brush oil on to the axis.

14. Assembly Diagram

14.1 Traverse Unit (ST3/5-S and ST3/5-T-S)

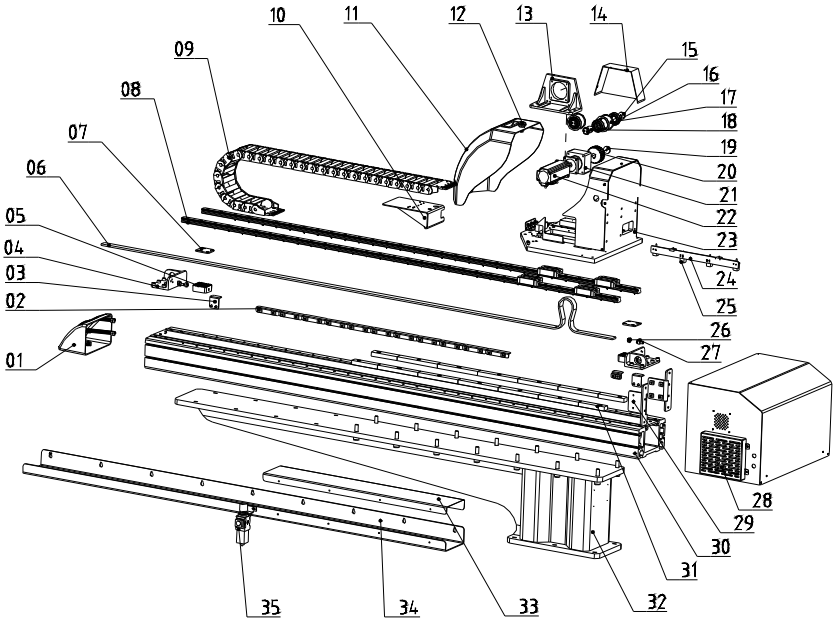

1. cover of traverse beam 2. safety sensor panel of mold 3. limited sensor panel
4. belt fixing frame 5. belt splint connecting piece 6. synchronous belt
7. belt pressure plate 8. linear guide rail 9. traverse drag chain
10. connector of traverse drag chain 11. cover of sliding seat 12. lock
13. motor supporting frame 14. cover of motor supporting frame 15.special washer
16. pulley bearing 17. pulley 18. connection shaft
19. special washer 20. synchronous wheel 21. speed reducer
22. servo motor 23. sliding seat 2
4. proximity switch mounting plate 25. proximity switch 26. buffer cap
27. buffer unit 28. control box
29. fixing plate of control box 30. aluminum profile of traverse
31. mounting plate of traverse beam 32.base
33. cover of traverse cable 34. supporting frame of traverse drag chain
35. filter regulator

14.2 Crosswise Unit (ST3-S)

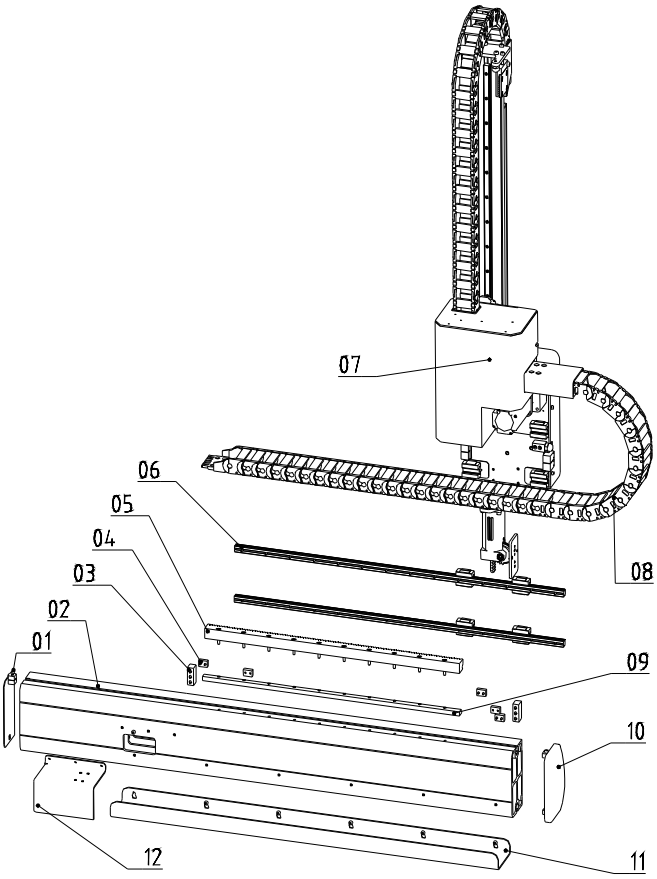

1. left cover on crosswise arm
2. crosswise aluminum profile
3. crosswise arm limit stopper
4. sensor plate of crosswise arm
5. rack
6. linear guide rail
7. arm
8. crosswise drag chain
9. fixing rack blocks
10. right cover on crosswise arm
11. supporting frame of crosswise drag chain
12. cover of crosswise drag chain

14.3 Crosswise Unit (ST5-S)

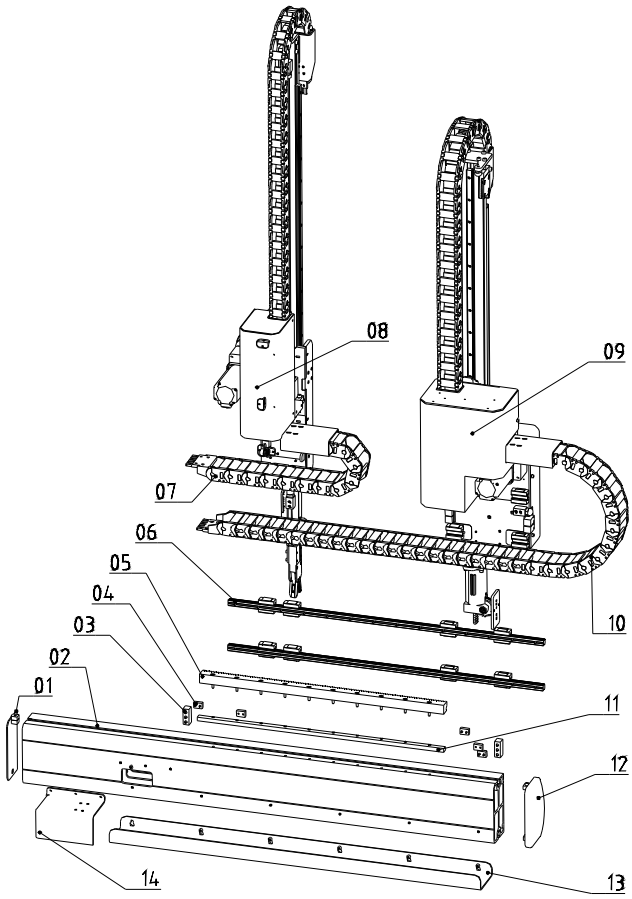

1. left cover on crosswise arm
2. crosswise aluminum profile
3. crosswise arm limit stopper
4. sensor plate of crosswise arm
5. rack
6.linear guide rail
7. crosswise drag chain on sub-arm
8. sub-arm
9. main arm
10. crosswise drag chain on main arm
11. fixing rack blocks
12. right cover on crosswise arm
13. supporting frame of crosswise drag chain
14. cover of crosswise drag chain

14.4 Main Arm (ST3/5-S)

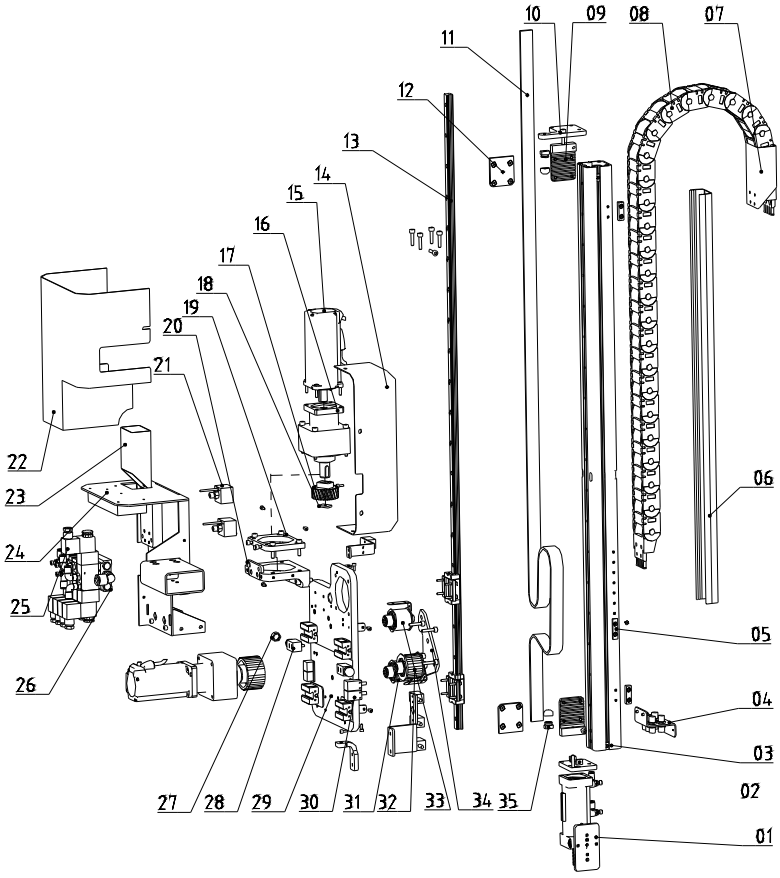

1. flip mechanism 2. fixing belt plate on main arm 1 3. main arm aluminum profile
4. spare supporting frame for air tube 5. sensor limit plate of arm 6. main arm cover
7. connector of drag chain 8. drag chain of main arm (up/down) 9. belt pressure plate 1
10. fixing belt sheet on main arm 4 11. synchronous belt 12. belt board connector
13. linear guide rail 14. cover of main arm mounting frame 15. servo motor
16. speed reducer 17. synchronous pulley 18. special washer
19. speed reducer flange of main arm 20. speed reducer mounting frame of crosswise
21. digital pressure switch 22. transition plate cover of main arm
23. connector of drag chain 24. transition plate of main arm
25. magnetic valve 26. distribution plate of main arm 27. buffer cap
28. limit fixing plate 29. mounting plate of main arm 30. proximity switch
31. connectiong shaft 32. driving & driven wheel of main arm (up/down)
33. pulley belt 34. connecting plate of driving & driven wheel
35. buffer unit

14.5 Sub-arm Unit (ST5-S)

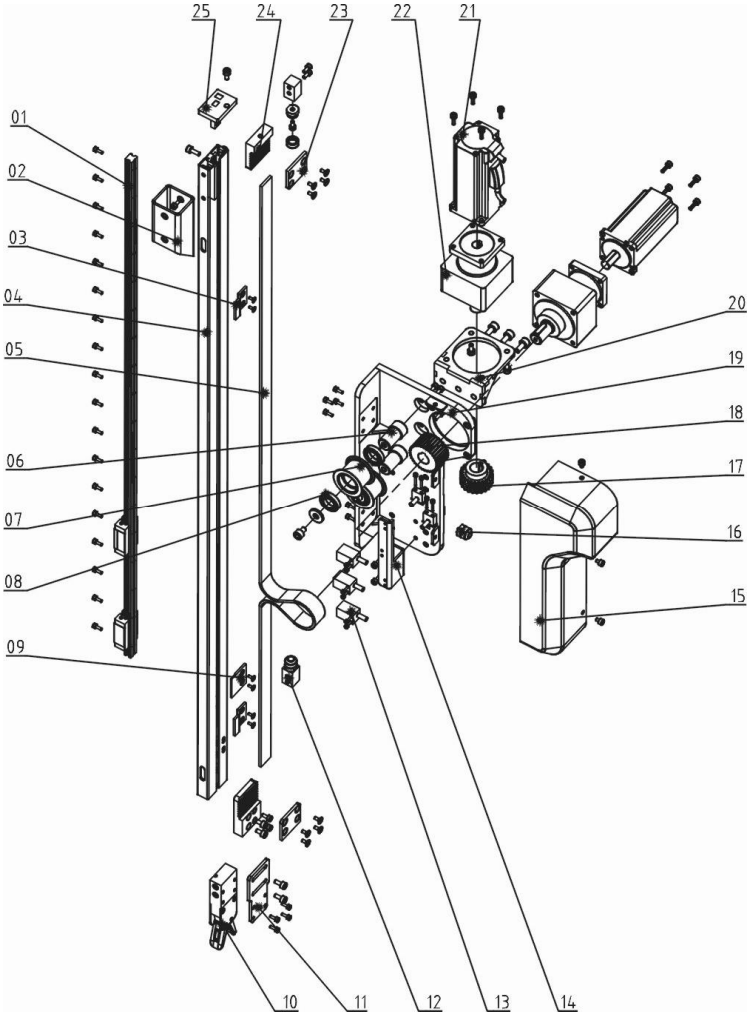

1. linear guide rail 2. connector of sub-arm (up/down) 3. limit sensor plate of arm
4. sub-arm aluminum profile 5. synchronous belt 6. connecting shaft
7. pulley belt 8. bearing 9. home position sensor plate
10. grip 11. fixing plate of grip 12. position limited block
13. proximity switch 14. mounting plate of proximity switch on sub-arm
15. cover of sub-arm 16. buffer unit 17. crosswise gear
18. synchronous wheel 19. mounting plate of sub-arm
20. mounting frame of crosswise motor 21. servo motor
22. speed reducer 23. belt splint connection piece
24. belt splint pressure plate 25. belt tunning plate of sub-arm

14.6 Traverse Unit (ST3/5-S-T)

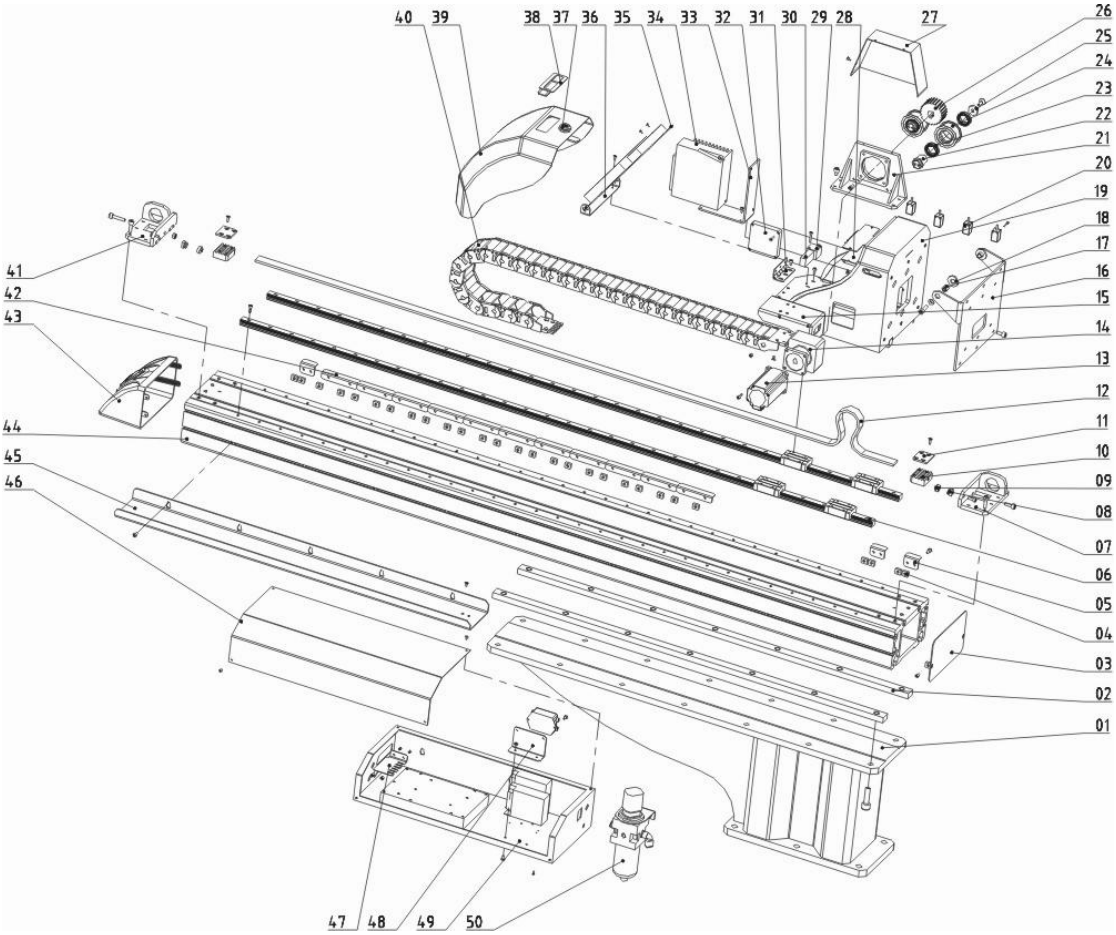

1. base 2. fixing block of traverse beam 3. end cover of traverse beam
4. fixed slider 5. limit sensor plate 6. linear guide rail
7. belt fixing frame 2 8. buffer unit 9. buffer cap
10. belt splint pressure plate 11. belt splint connection piece 12. synchronous belt
13. servo motor 14. speed reducer 15. fixing plate of traverse drag chain
16. transition plate of crosswise aluminium profile 17. shaft of crosswise beam
18. washer 19. sliding seat 20. proximity switch
21. motor supporting frame 22. connecting shaft 23. pulley bearing
24. pulley 25. special washer 26. synchronous wheel
27. cover of motor supporting frame 28. braking resistor
29. fixing block of pressure switch 30. pressure switch 31. hinge
32. exhaust fan 33. mounting plate of drive 34. drive
35. mounting frame of traverse terminal 36. bottom frame of traverse terminal

37. lock
38. T-plastic handle
39. cover of sliding seat
40. travese drag chain
41. fixing frame of belt 1
42. safety sensor plate in mold
43. end cover of traverse beam
44. traverse aluminum profile
45. supporting frame of traverse drag chain
46. cover of control box
47. ground connection plate
48. mounting plate of filter
49. control box unit
50. filter regulator valve

14.7 Crosswise Unit (ST3-S-T)

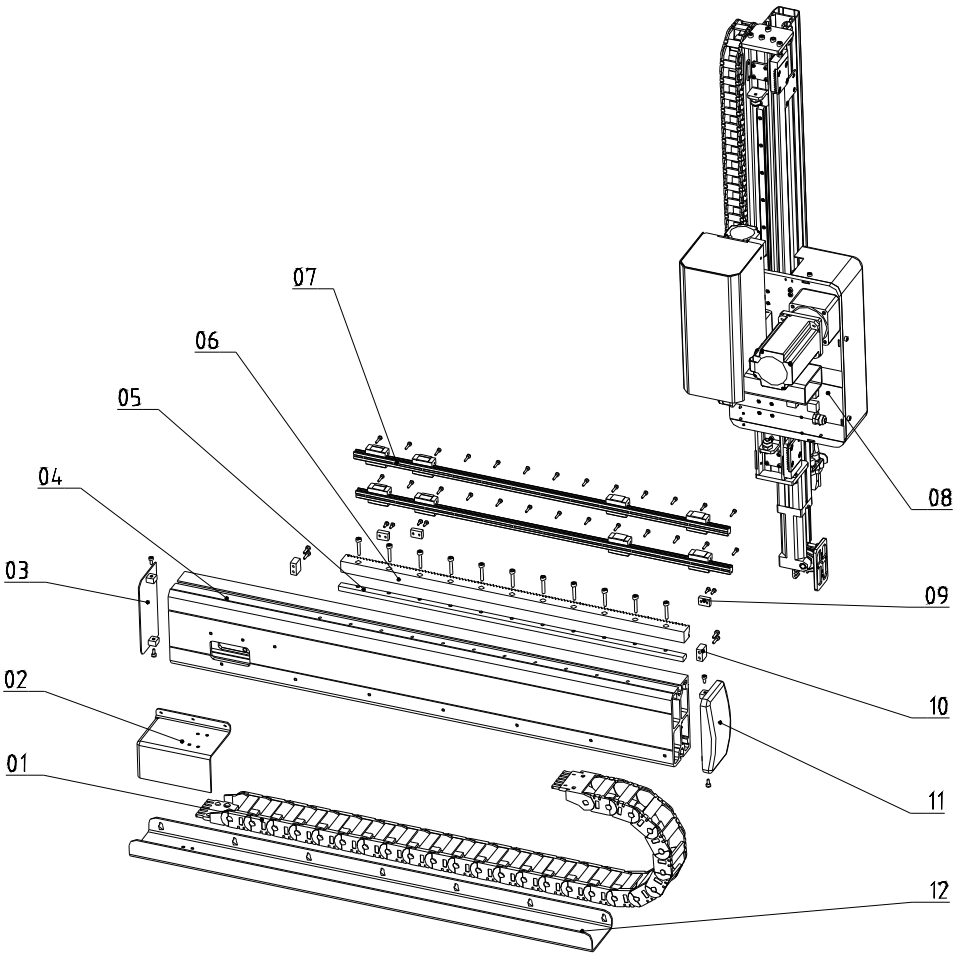

1. crosswise drag chain on main arm
2. cover of crosswise drag chain
3. cover of crosswise arm
4. crosswise aluminum profile
5. rack fixing block
6. rack
7. linear guide rail
8. main arm
9. sensor plate of crosswise
10. limited block
11. right cover of crosswise arm
12. supporting frame of crosswise drag chain

14.8 Crosswise Unit (ST5-S-T)

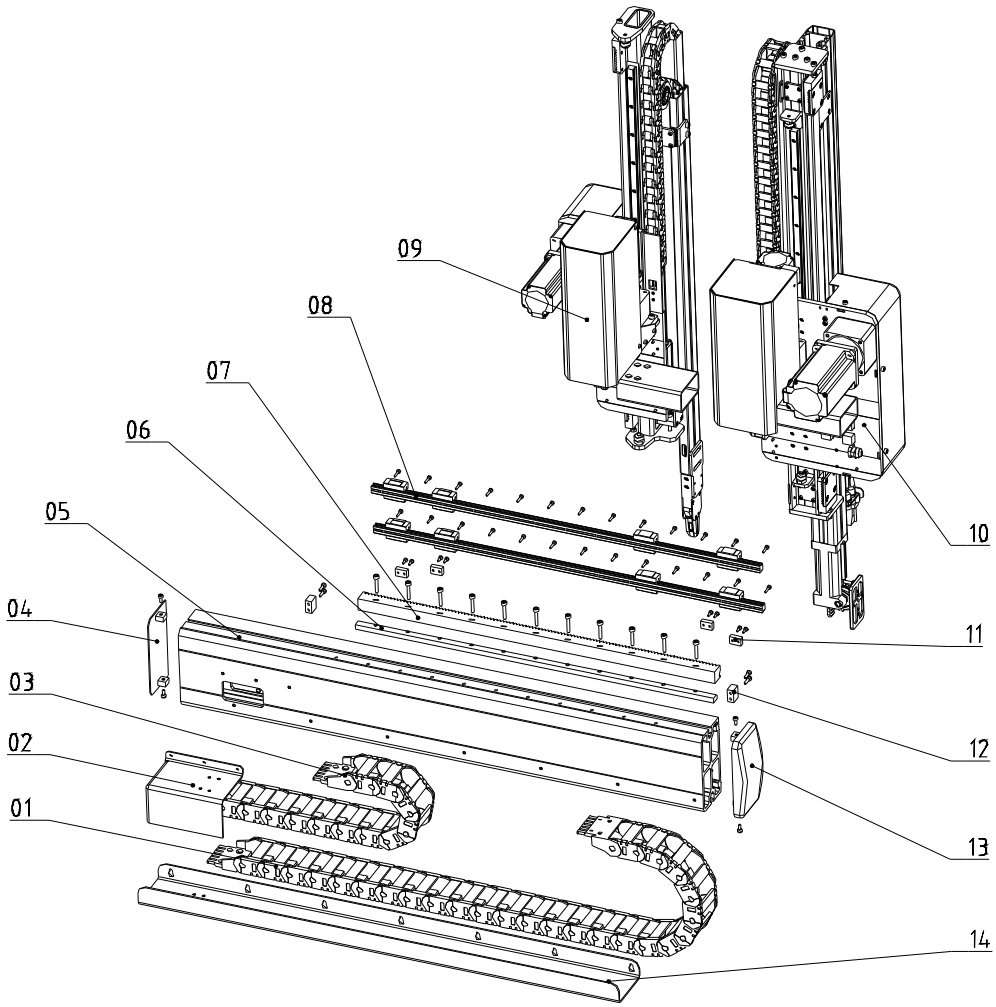

1. crosswise drag chain on main arm
2. cover of crosswise drag chain
3. crosswise drag chain on sub-arm
4. left cover of crosswise arm
5. crosswise aluminum profile
6. rack fixing block
7. rack
8. linear guide rail
9. sub-arm
10. main arm
11. sensor plate of crosswise
12. limited block
13. right cover of crosswise arm
14. supporting frame of crosswise drag chain

14.9 Main Arm (ST3/5-S-T)

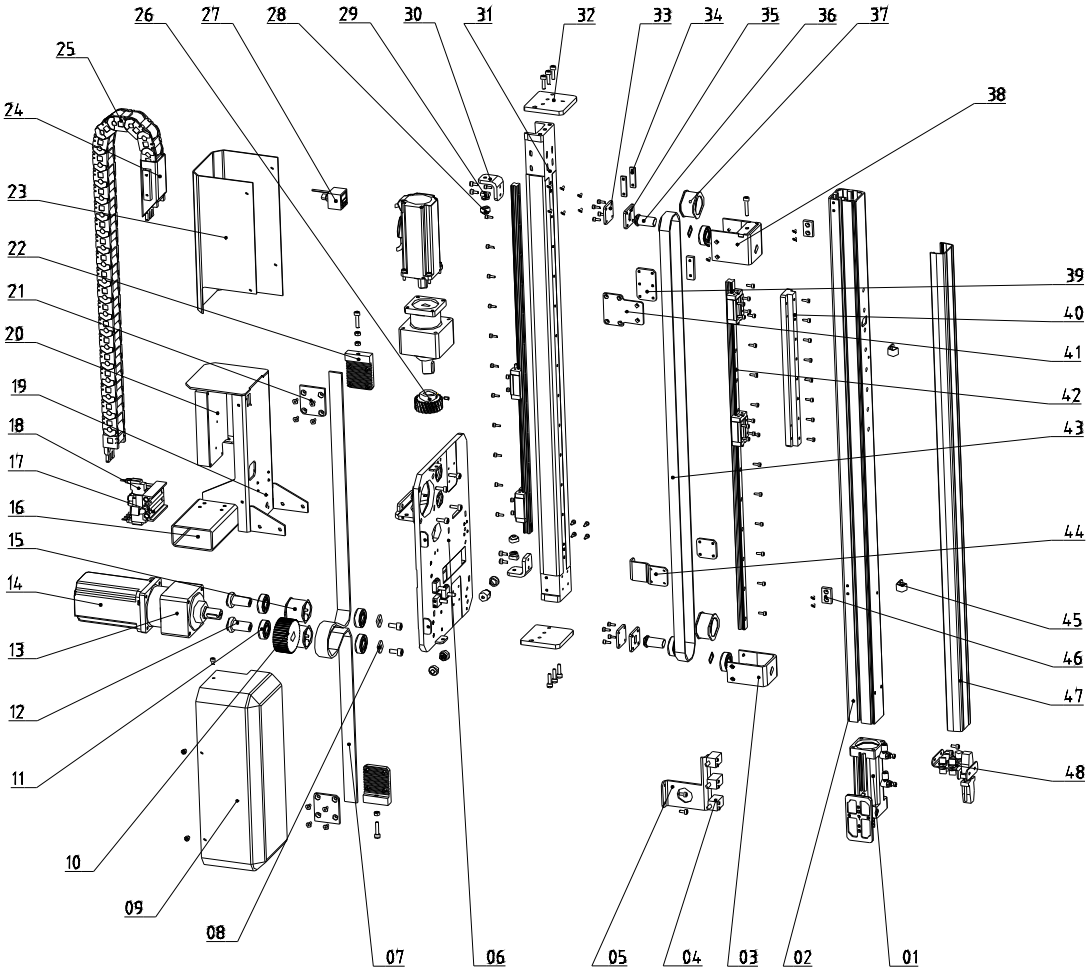

1. flip mechanism 2. main arm aluminum profile 3. supporting plate of pulley
4. proximity switch 5. mounting plate of proximity switch
6. mounting frame of main arm 7. synchronous belt 2 8. special wahser
9. cover of mounting frame for ST3-S main arm 10. synchronous wheel 11. bearing
12. connecting shaft 13. speed reducer 14. servo motor 15. pulley belt
16. connector of crosswise drag chain on main arm
17. distribution plate of main arm 18. magnetic valve
19. transition plate of main arm 20. terminal mounting plate of main arm
21. belt splint connecting piece 22. belt pressure plate
23. transition plate cover of main arm 24. connector of main arm drag chain
25. main arm drag chain 26. rack of crosswise

27. digit display pressure switch 28. buffer cap
29. buffer unit 30. position limit plate
31. transition aluminum profile of main arm 32. belt fixing block on main arm (up)
33. fixing plate of pulley 1 34. fixing block 1 35. fixing plate of pulley 2
36. connecting shaft for telescopic arm 37. pulley
38. belt tunning unit 39. belt tooth plate of arm 1 40. fixing plate of arm
41. fixing plate of belt (down) 42. linear guide rail 43. synchronous belt
44. fixing plate of belt (up) 45. cable clamp 46. stack sensor block
47. aluminum cover of main arm 48. spare frame of air tube

14.10 Sub-arm (ST5-S-T)

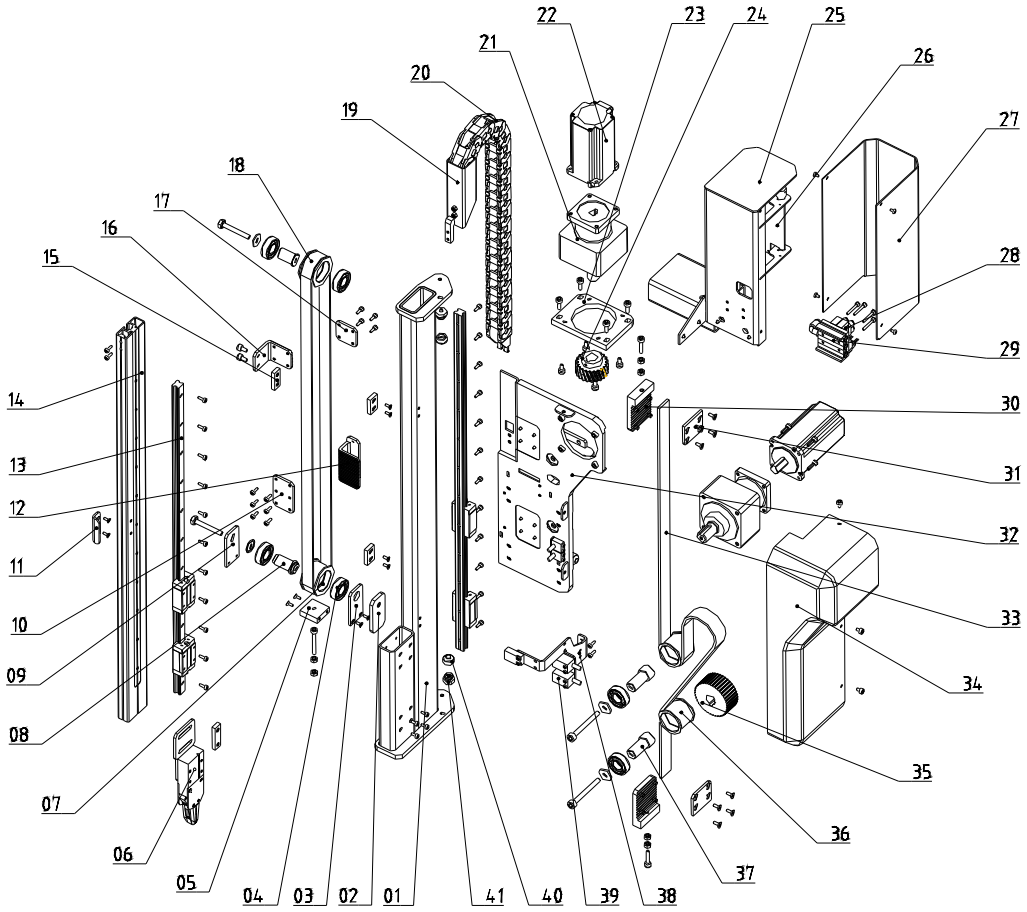

1. welded assemblies of sub-arm 2. belt tuning plate 3. fixing plate of pulley 1
4. bearing 5. fixing plate of pulley 6. grip 7. pulley
8. connecting shaft of telescopic arm 9. fixing plate of pulley 2
10. fixing plate of sub-arm toot plate (down) 11. home position sensor plate of sub-arm
12. belt tooth plate of sub-arm (down) 13. linear guide rail
14. sub-arm aluminium profile 15. fixing plate of sub-arm toot plate (up)
16. belt tooth plate of sub-arm (up) 17. fixing plate of sub-arn tooth plate (up)
18. synchronous belt 2 19. connector of sub-arm drag chain
20. sub-arm drag chain 21. speed reducer 22. servo motor 2
23. speed reducer flange of main arm 24. corsswise gear
25. transition plate of sub-arm 26. terminal mounting frame of sub-arm 2
27. transition plate cover of sub-arm 28. magnetic valve

29.distribution plate of sub-arm
30. belt pressure plate 2
31. belt splint connecting piece
32. mounting frame of sub-arm
33. synchronous belt 1
34. cover of mounting frame for sub-arm
35. synchronous wheel
36. pulley belt
37. connecting shaft
38. mounting plate of proximity switch on sub-arm
39. proximity switch
40. buffer cap
41. buffer unit

14.11 Traverse Unit (ST3/5-S Medium Telescopic)

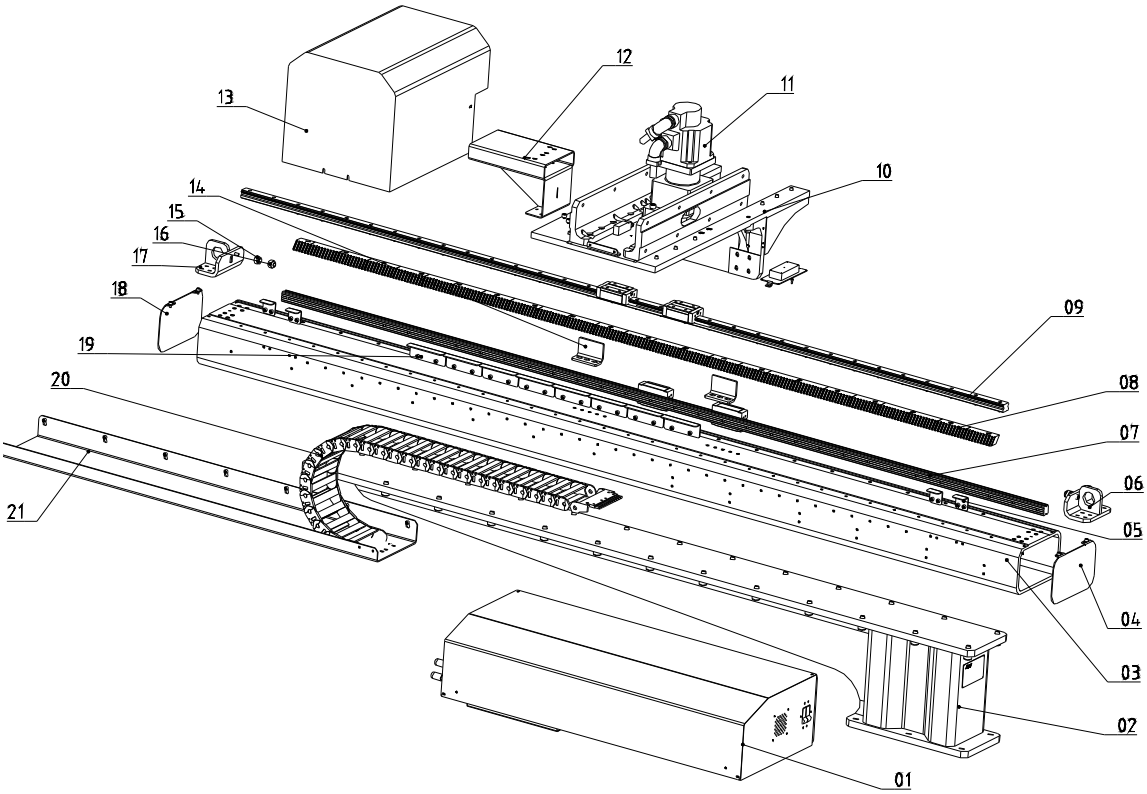

1. control box
2. base
3. traverse aluminium profile
4. cover of traverse beam
5. limit sensor block
6. position limit frame
7. linear guide rail
8. traverse rack
9. linear guide rail
10. silding seat
11. motor
12. connector of drag chain
13. cover of silding seat
14. packing limit unit on traverse beam
15. buffer cap
16. buffer unit
17. position limit frame
18. cover of traverse beam
19. safety sensor plate in mold
20. traverse drag chain
21. supporting frame of traverse drag chain

14.12 Crosswise Unit (ST3-S Medium Telescopic)

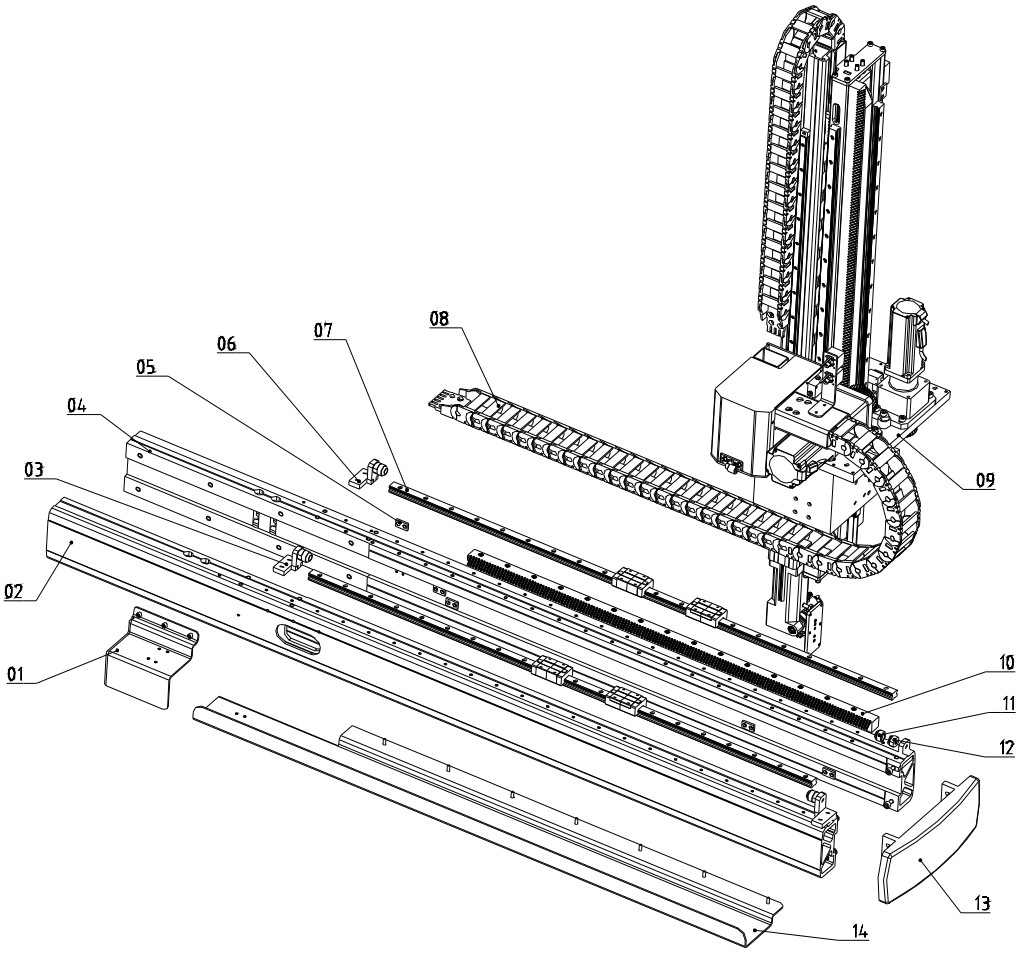

1. cover of crosswise drag chain	2. crosswise beam 1	3. limit stopper
4. crosswise beam 2	5. sensor plate	6. limit stopper
7. linear guide rail	8. crosswise drag chain	9. main arm
10. crosswise rack	11. buffer unit	12. buffer cap
13. cover of crosswise beam	14. supporting frame of crosswise drag chain	

14.13 Crosswise Unit (ST5-S Medium Telescopic)

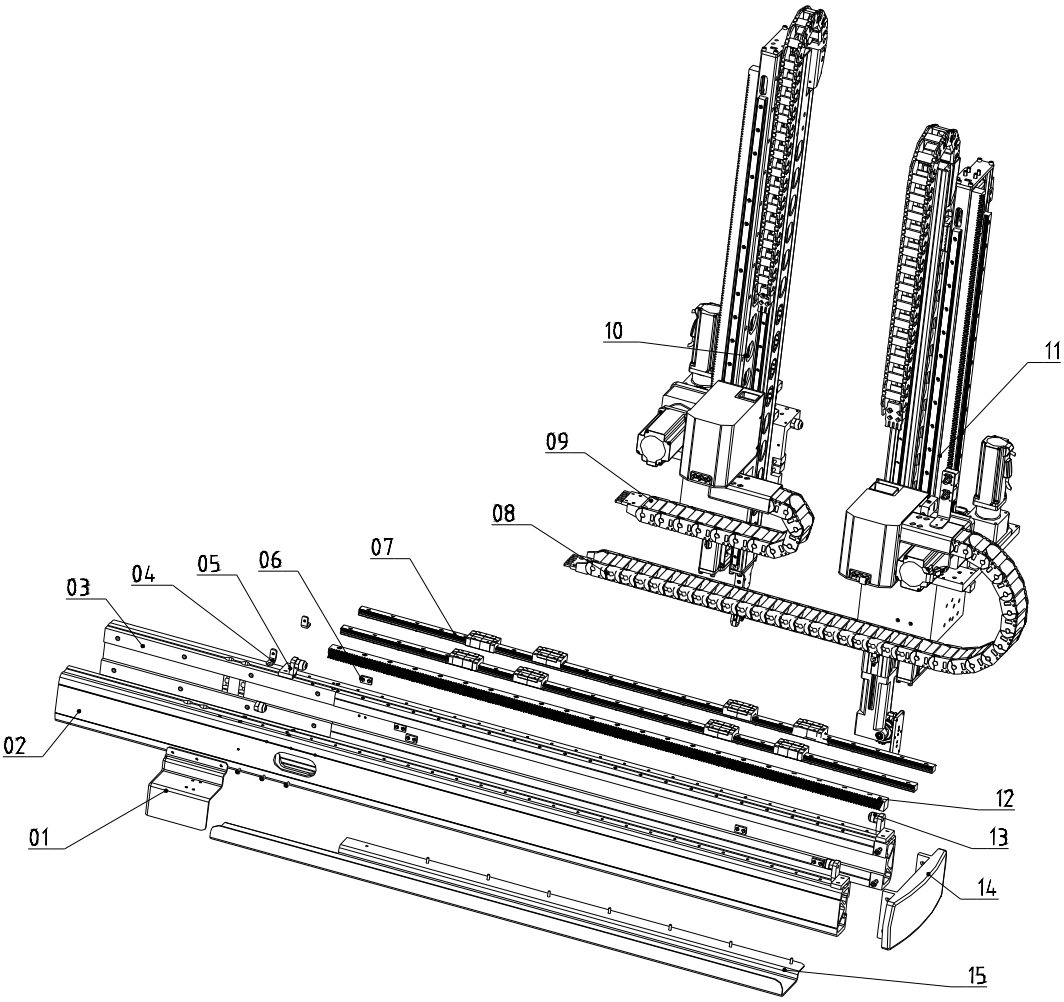

1. cover of crosswise drag chain
2. crosswise beam 1
3. crosswise beam 2
4. mounting frame
5. limit stopper
6. sensor plate
7. linear guide rail
8. crosswise drag chain on main arm
9. crosswise drag chain on sub-arm
10. sub-arm
11. main arm
12. crosswise gear
13. outer limit stopper
14. cover of crosswise beam
15. supporting frame of crosswise drag chain

14.14 Main Arm (ST3/5-S Medium Telescopic)

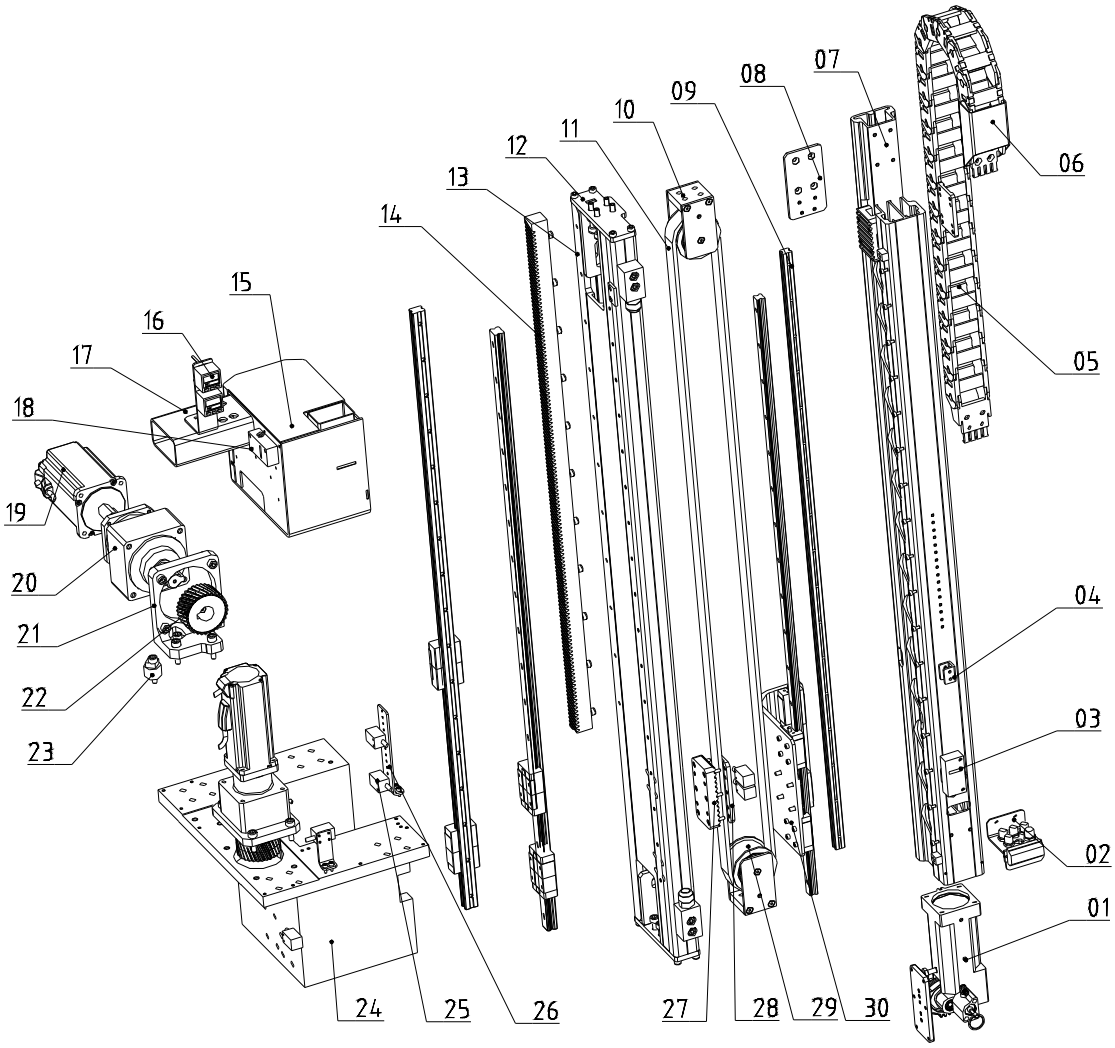

1. flip cylinder
2. spare frame for air tube
3. vacuum generator
4. limit sensor plate (down)
5. main arm drag chain (up/down)
6. connector of drag chain
7. arm aluminum profile for medium type model
8. transition plate of drag chain (up/down)
9. linear guide rail
10. fixing plate of pulley
11. synchronous belt of main arm
12. belt driving tension plate 1
13. main arm transfer
14. rack for medium type (up/down)
15. air tube transition seat of main arm
16. digital pressure switch
17. crosswise drag connector of main arm
18. vacuum generator
19. servo motor
20. speed reducer
21. gear mounting frame of main arm
22. gear for medium type (up/down)

23. eccentric wheel of gear
24. mounting frame of main arm
25. proximity switch
26. mounting plate of proximity switch
27. belt pressure plate of main arm
28. belt splint connecting piece
29. arm pulley for telescopic arm
30. mounting plate of linear slider 1

14.15 Sub-arm (ST5-S Medium Telescopic)

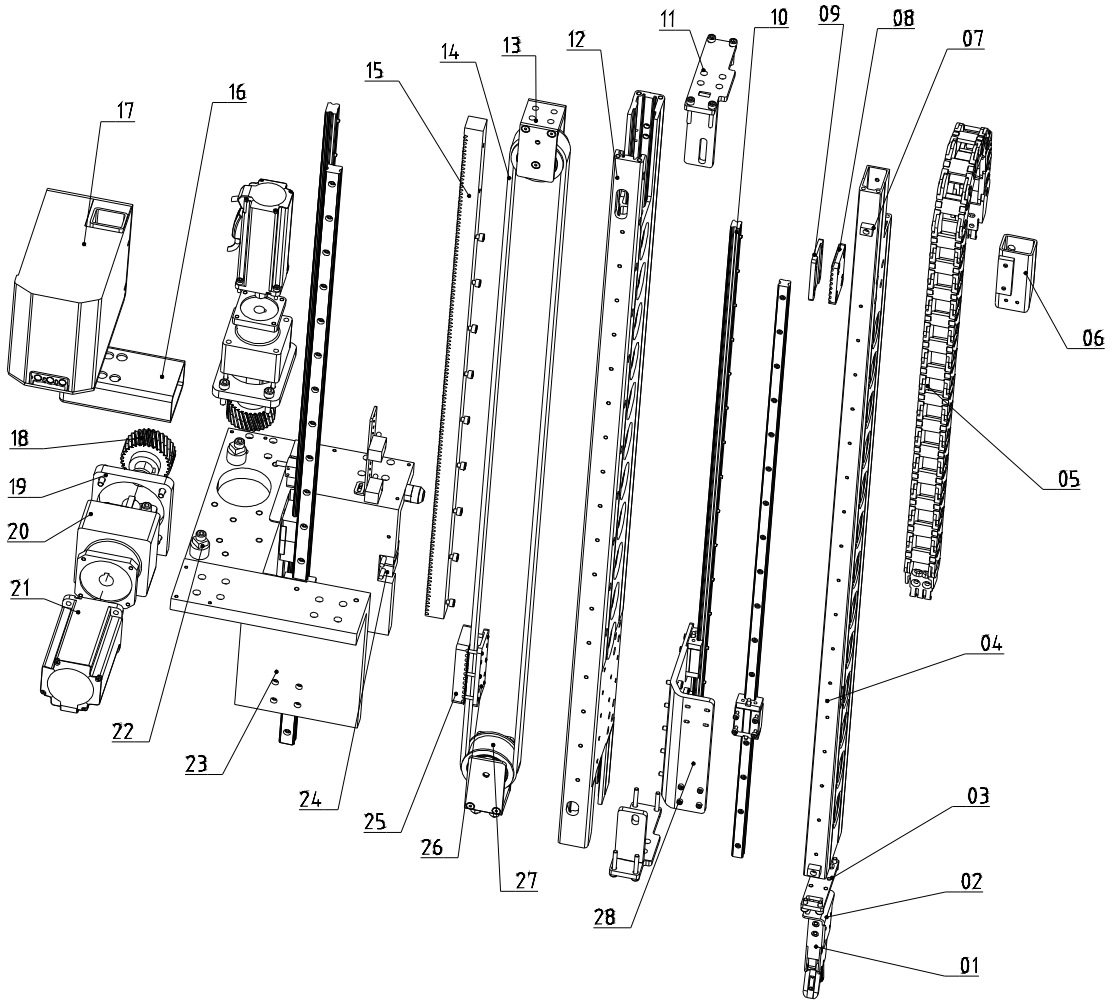

1. grip 2. mounting plate of grip 2 3. mounting plate of grip 1
4. sub-arm aluminium profile for medium type 5. sub-arm drag chain (up/down)
6. connector of sub-arm drag chain (up/down) 7. slider position limit block
8. belt pressure plate of sub-arm 3 9. belt tuning plate
10. linear guide rail 11. belt driving tension plate 12. sub-arm transfer
13. fixing plate of pulley 14. sub-arm synchronous belt
15. rack for medium type (up/down) 16. connector of crosswise drag chain on sub-arm
17. air tube transition seat of sub-arm 18. gear for medium type (up/down)
19. gear mounting frame of main arm 20. speed reducer
21. servo motor 22. eccentric wheel of gear 23. mounting frame of sub-arm

24. proximity switch
25. belt pressure plate of main arm 1
26. belt splint connecting piece
27. arm pulley for telescopic
28. mounting plate of linear linear slider 2

14.16 Traverse Unit (ST3-S-L-T)

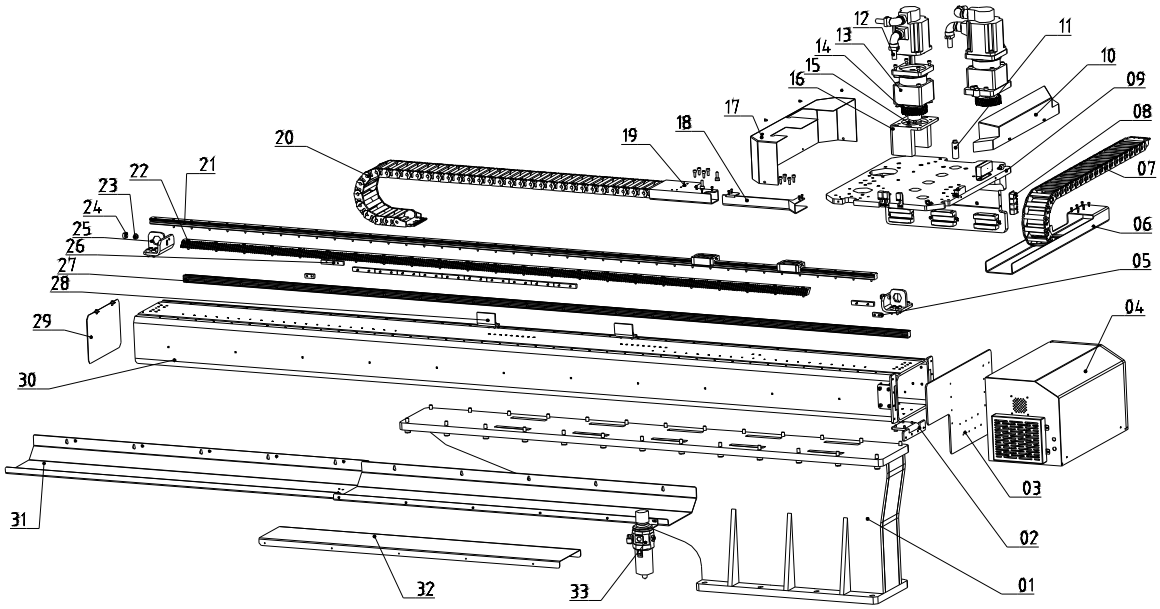

1. base
2. fixing plate of control box
3. connecting plate of control box
4. control box
5. limit sensor plate
6. supporting frame of crosswise drag chain
7. drag chain
8. proximity switch
9. main frame parts
10. cover of main frame 2
11. crosswise eccentric wheel
12. servo motor
13. speed reducer
14. gear for ST3-S-L
15. washer of speed reducer
16. mounting seat of crosswise speed reducer 02
17. cover of main frame 1
18. traverse cable frame
19. connector of traverse drag chain
20. traverse drag chain
21. linear guide rail
22. traverse gear
23. buffer cap
24. buffer unit
25. position limit welded assemblies
26. safety sensor plate in mold
27. linear guide rail
28. packing position limit unit on traverse
29. cover of traverse beam
30. traverse aluminium profile
31. supporting frame of traverse drag chain
32. cover of traverse cable
33. filter regulator valve

14.17 Crosswise Unit (ST3-S-L-T)

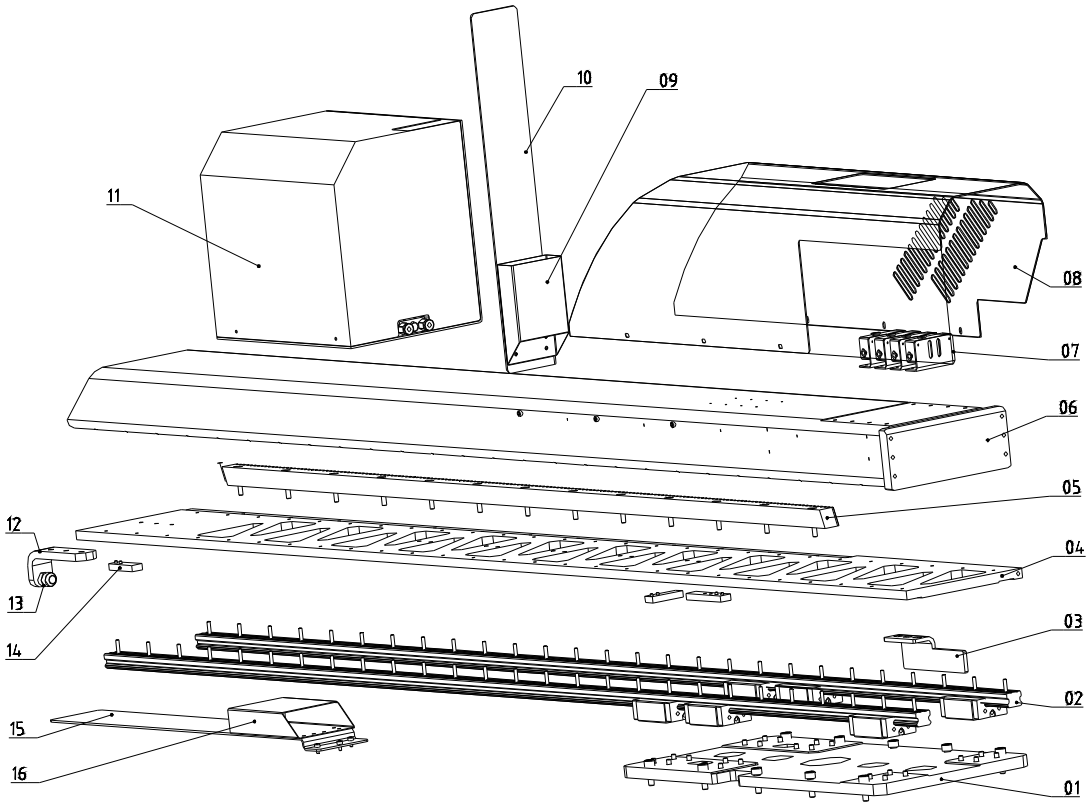

1. main frame parts 3
2. linear guide rail
3. packing position limit unit on corsswise
4. crosswise beam 1
5. crosswise rack for ST3-S-L
6. welded assemblies of crosswise aluminium profile
7. vacuum generator
8. cover of crosswise aluminium profile
9. connector of drag chain (up/down)
10. supporting frame of drag chain (up/down)
11. electrical components mounting cover
12. crosswise position limit plate
13. buffer unit
14. fixing plate of crosswise sensor
15. extenstion board of crosswise drag chain
16. connector of crosswise drag chain

14.18 Main Arm (ST3-S-L-T)

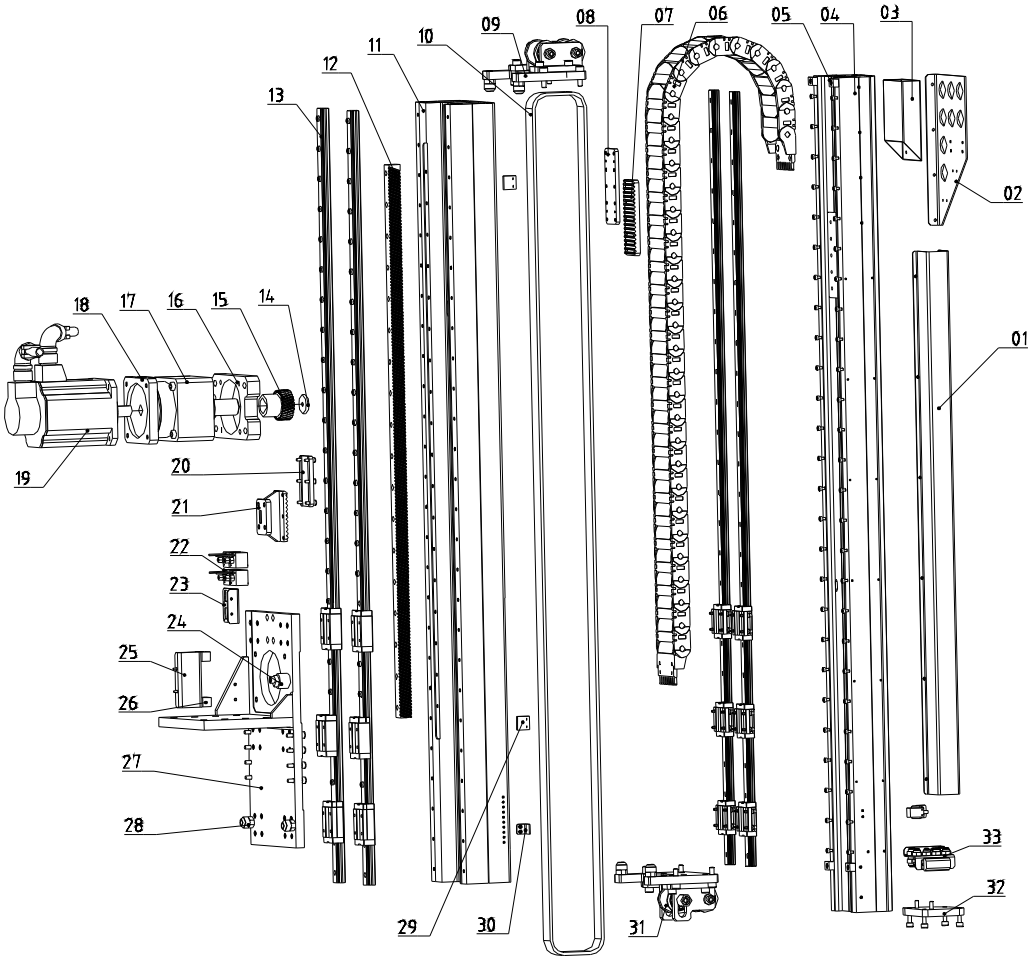

1. cover 2. drag chain frame (up/down) 3. connector of drag chain (up/down)
4. the second aluminum profile for ST3-S-L-T 5. slider limit block
6. main arm drag chain 7. fixing tooth plate for the second arm section
8. belt splint 61 9. fixing plate of belt 10. synchronous belt
11. the second aluminum profile for ST3-S-L-T 12. crosswise rack
13. linear guide rail 14. special washer
15. mounting plate of speed reducer (up/down) 16. arm gear for ST3-S-L-T
17. speed reducer 18. speed reducer 19. servo motor
20. belt splint 63 21. tooth plate (up/down) 22. digital pressure switch
23. mounting frame of digital pressure switch 24. traverse eccentric wheel
25. mounting plate of proximity switch 26. proximity switch
27. mounting plate of main arm 28. buffer

29. limit sensor plate 30. home position sensor plate 31. arm tension pulley

32. connection plate of flip cylinder

33. spare frame for air tube

15. Pneumatic Schematic Diagram

15.1 ST3-S

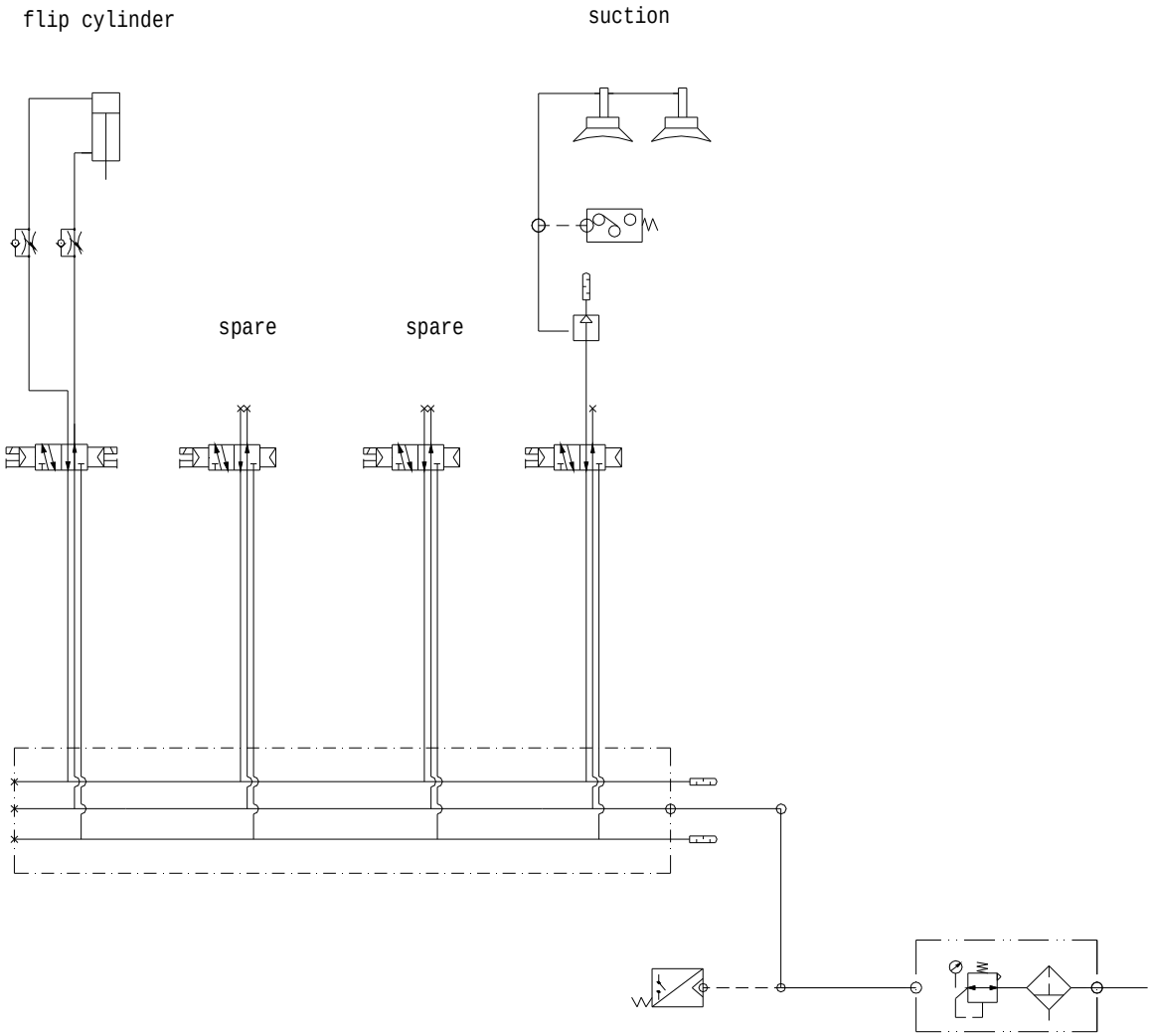

15.2 ST5-S

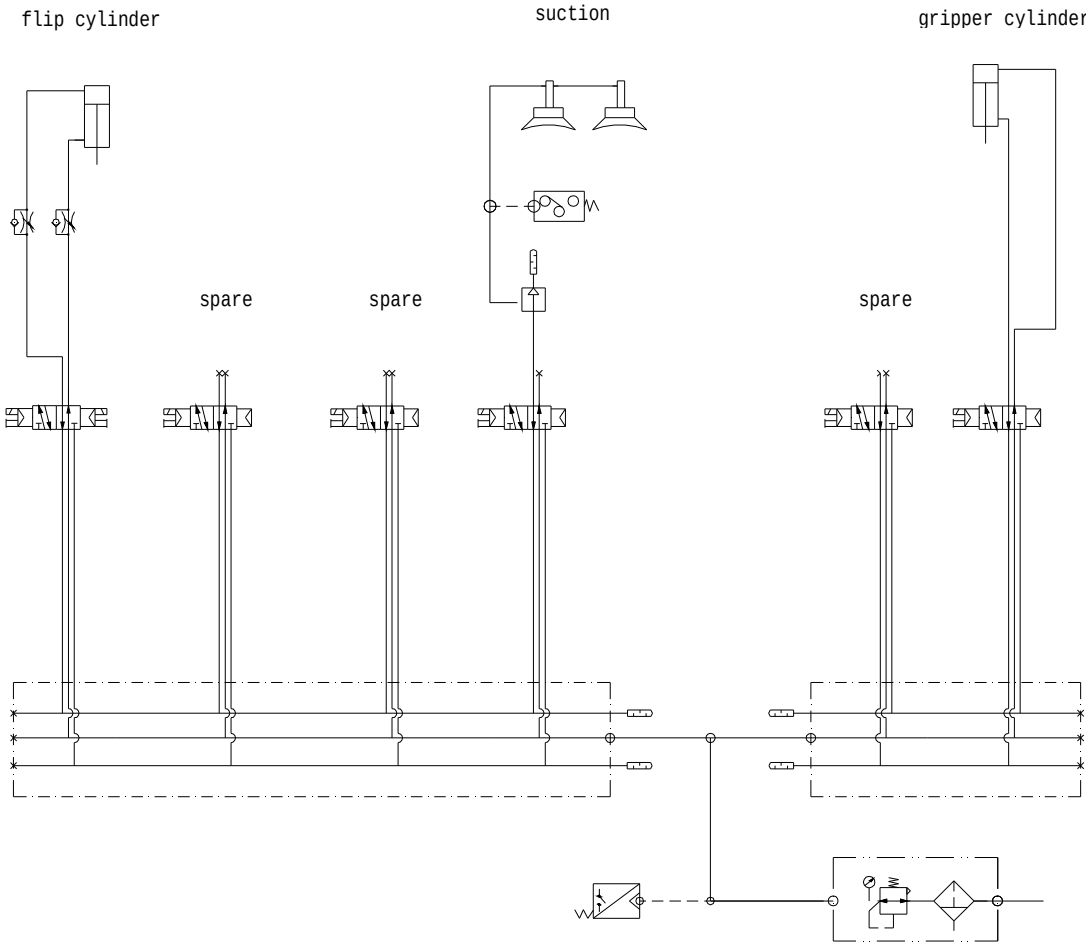

16. Electrical Control Charts (ST3-S)

16.1 Power Supply Wiring Diagram

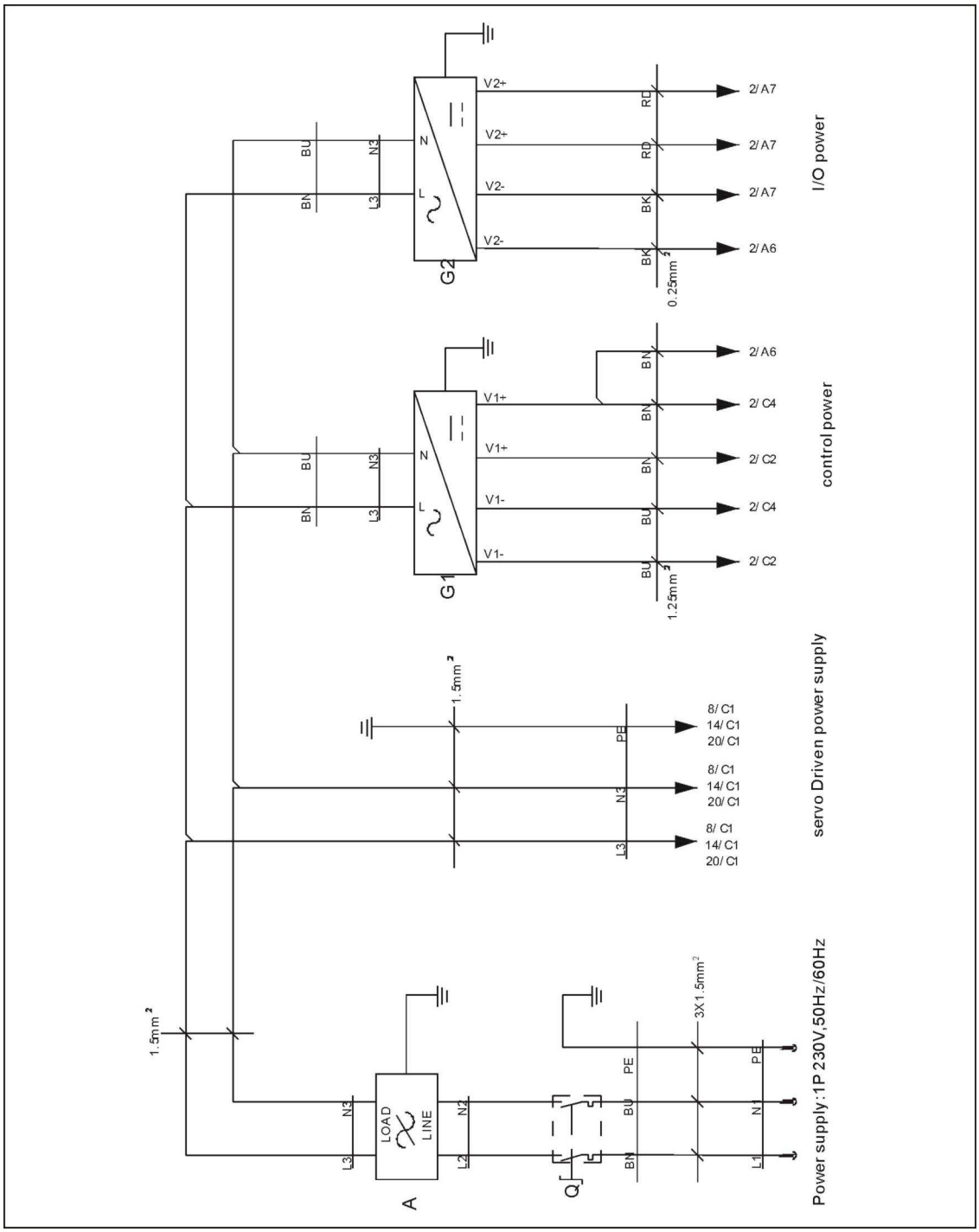

16.2 DC Power Supply Diagram

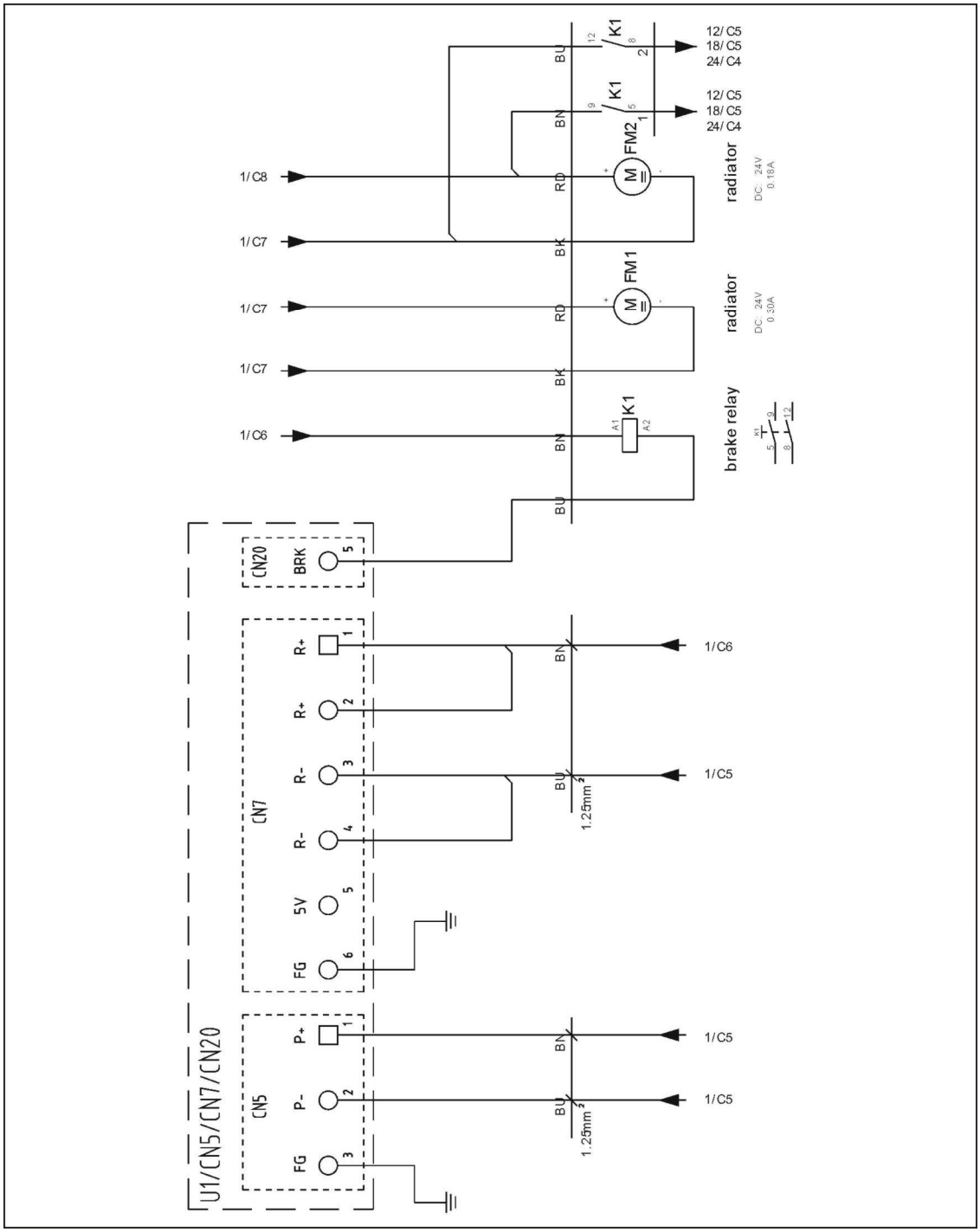

16.3 Traverse Input and Output Wiring Diagram

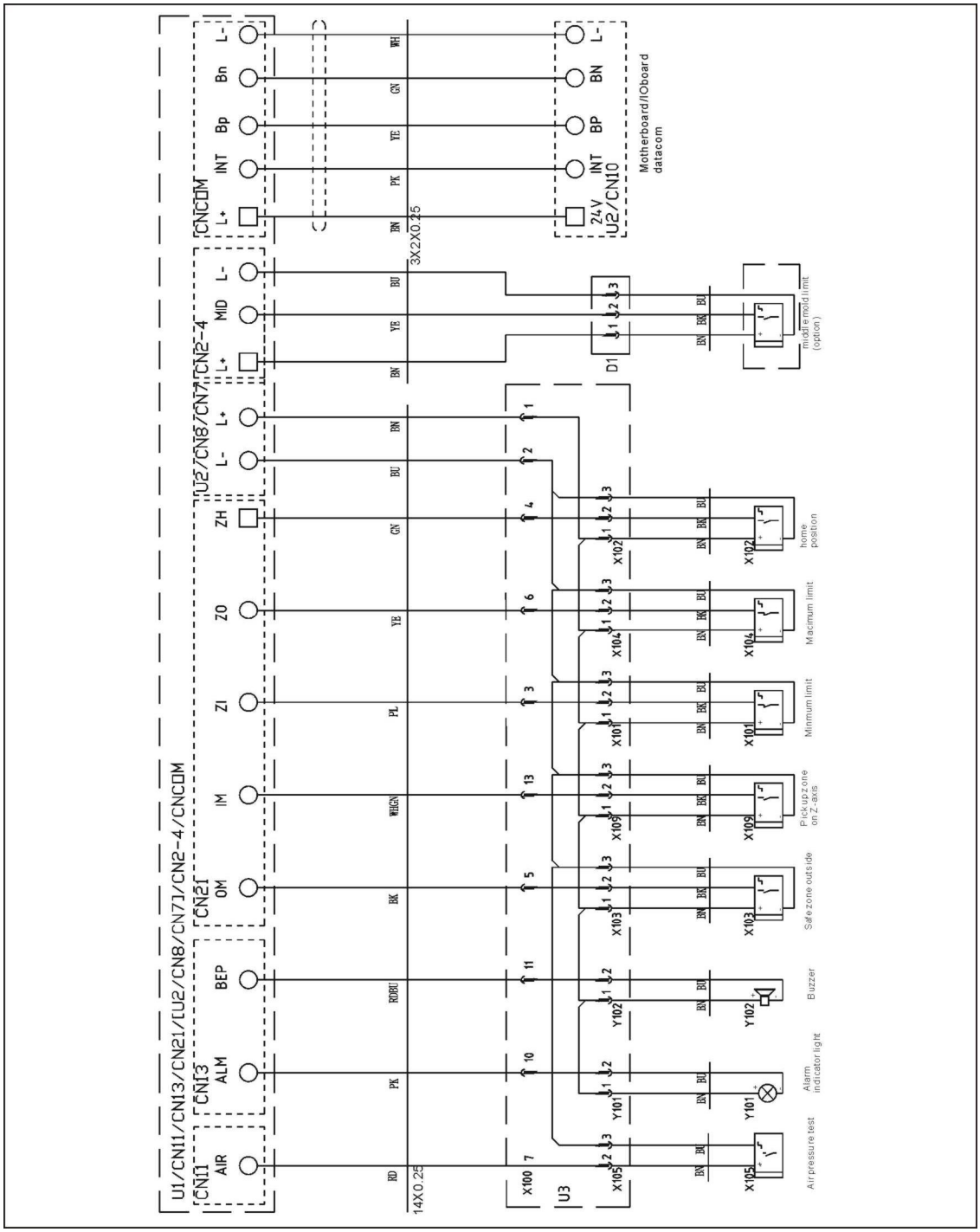

16.4 Main Arm Signal Input Wiring Diagram

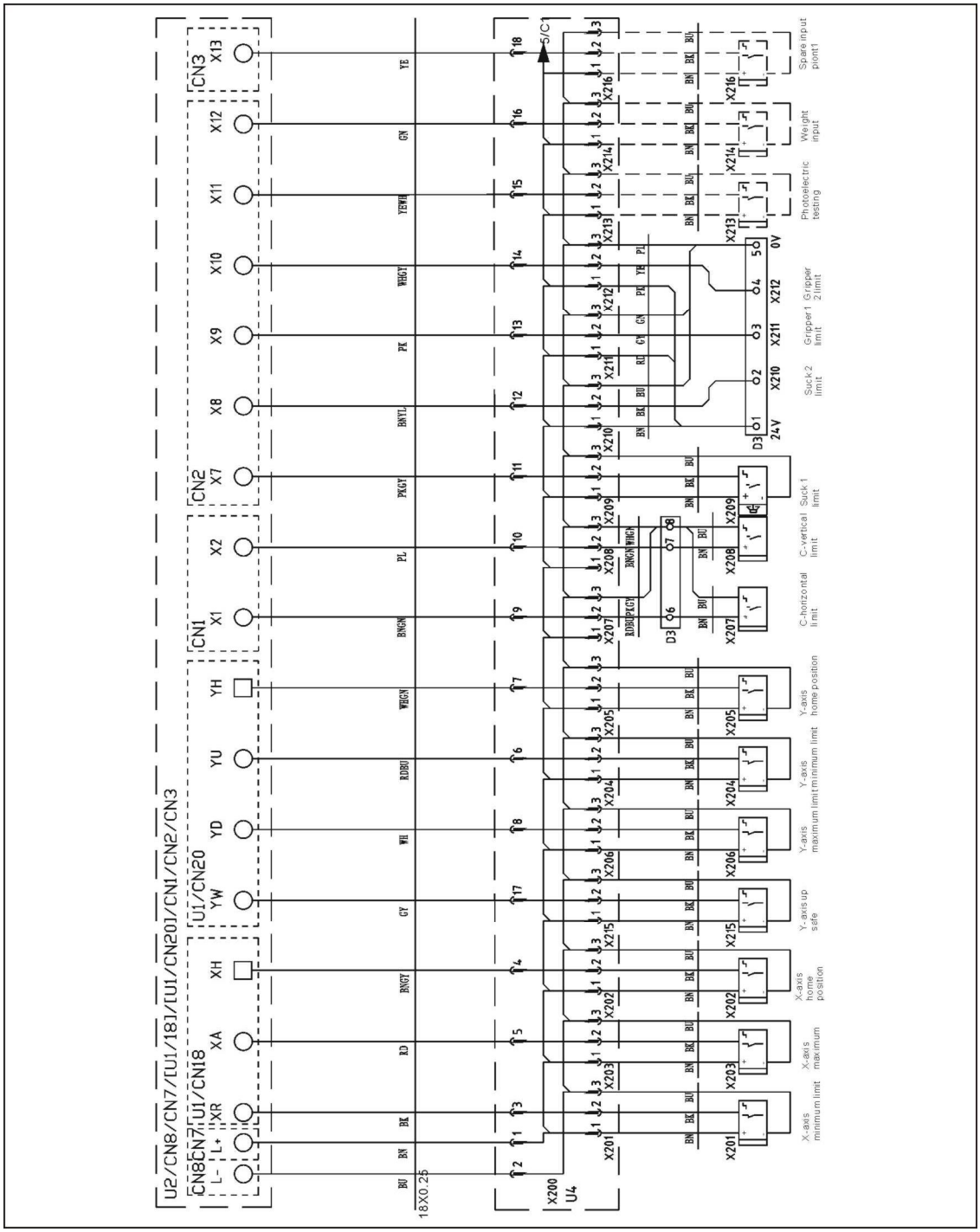

16.5 Main Arm Signal Output Wiring Diagram

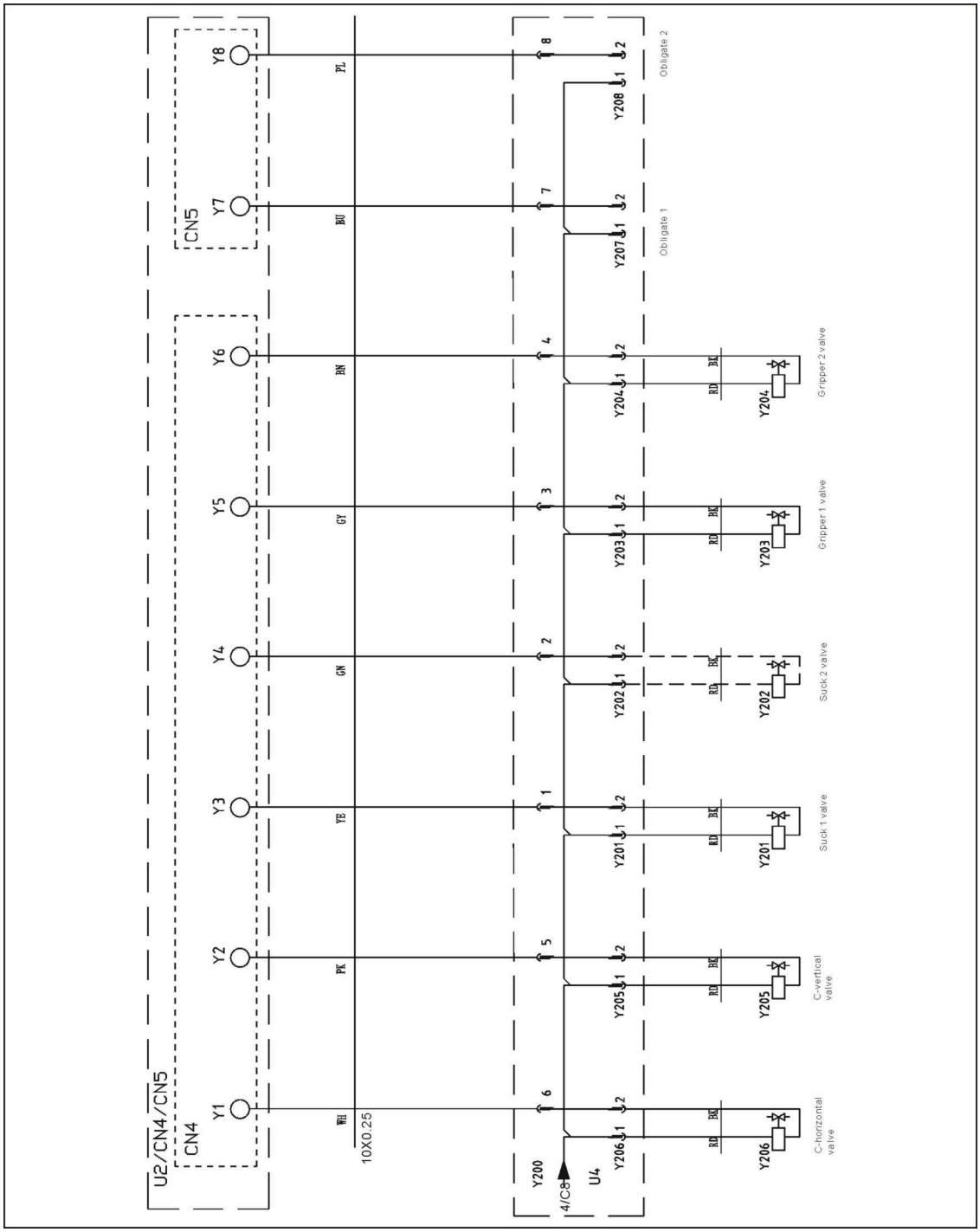

16.6 Pneumatic Sub-arm Signal I/O Wiring Diagram

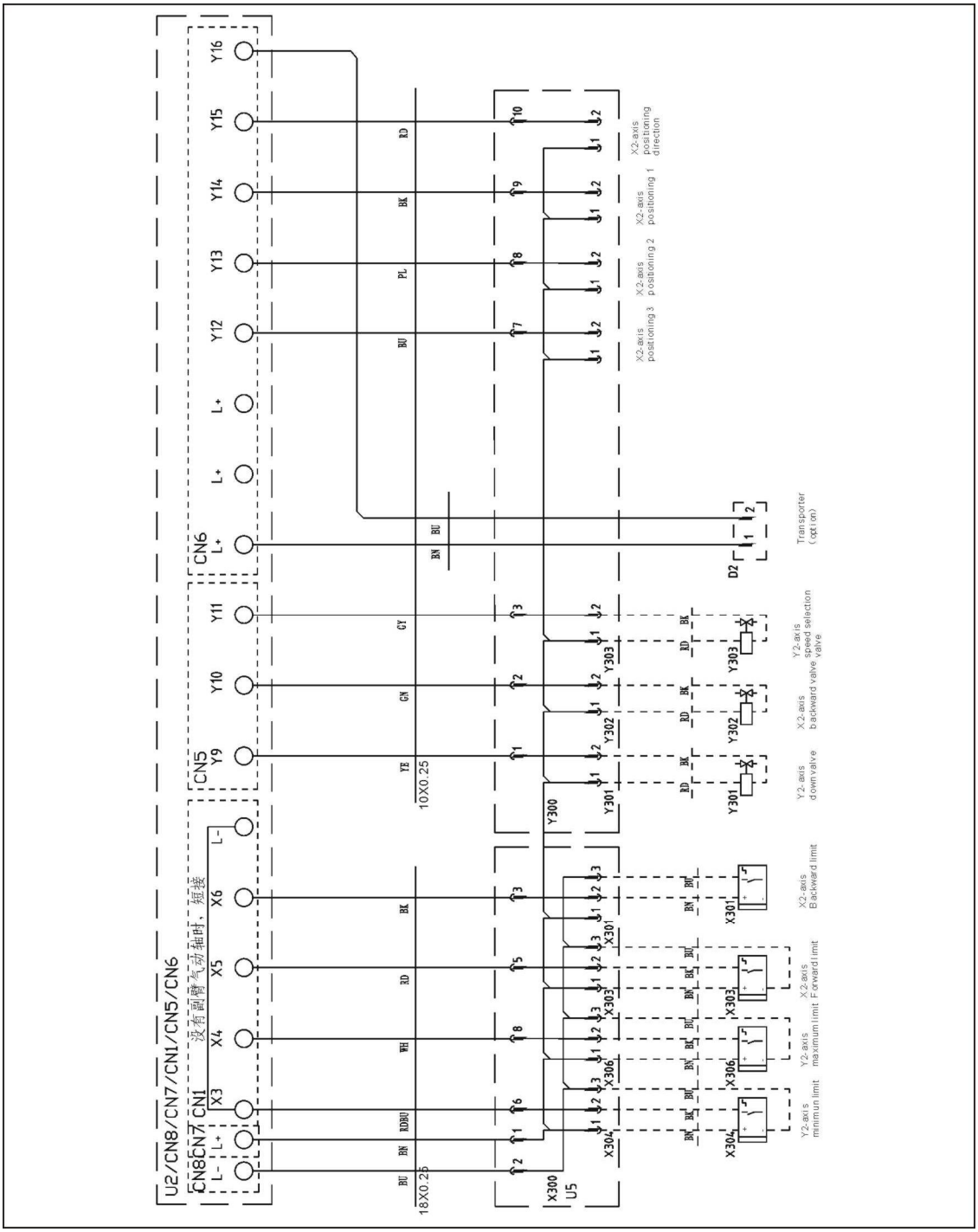

16.7 Z-axis Panasonic Servo Drive I/O Wiring Diagram

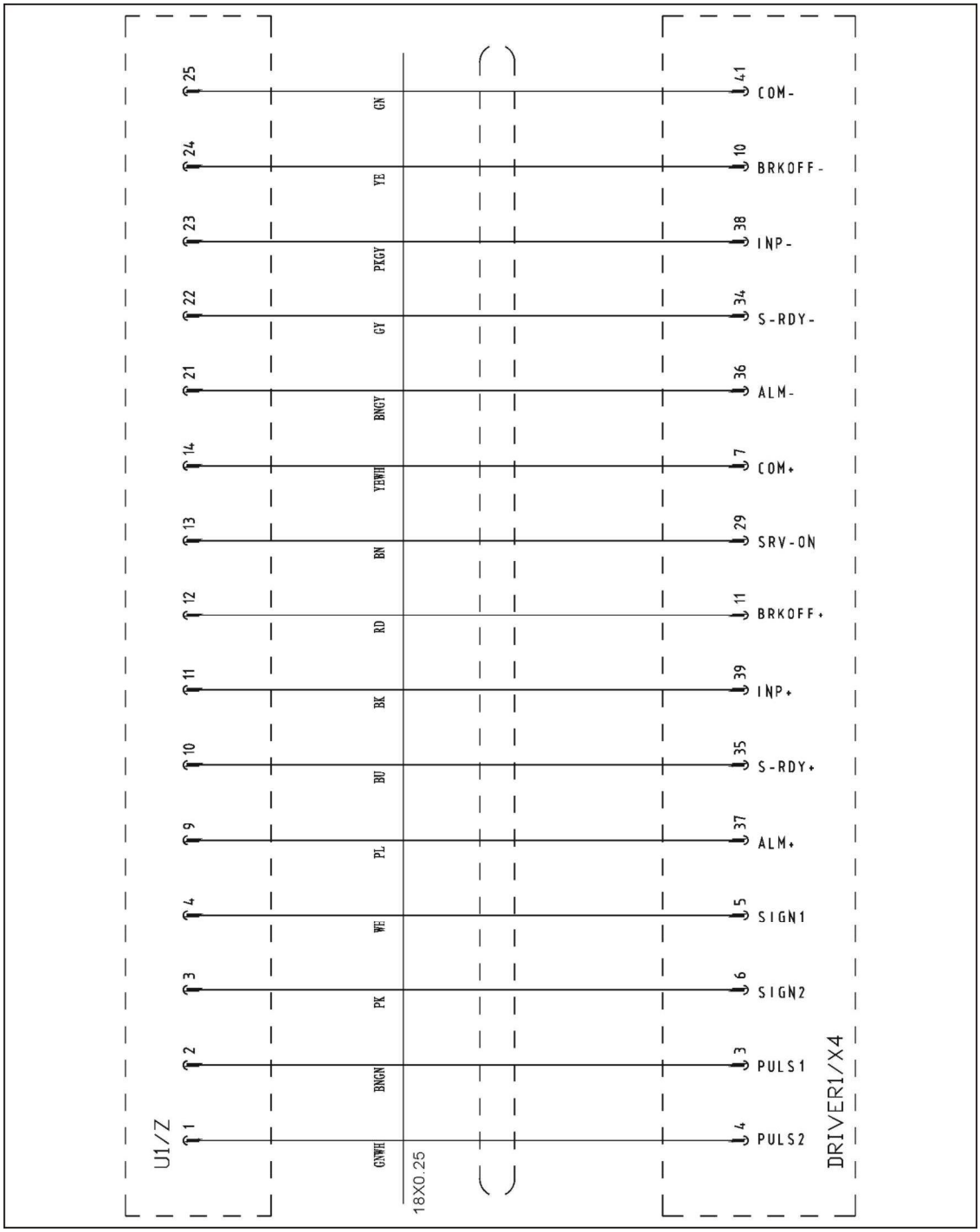

16.8 Z-axis Panasonic Servo Motor Wiring Diagram

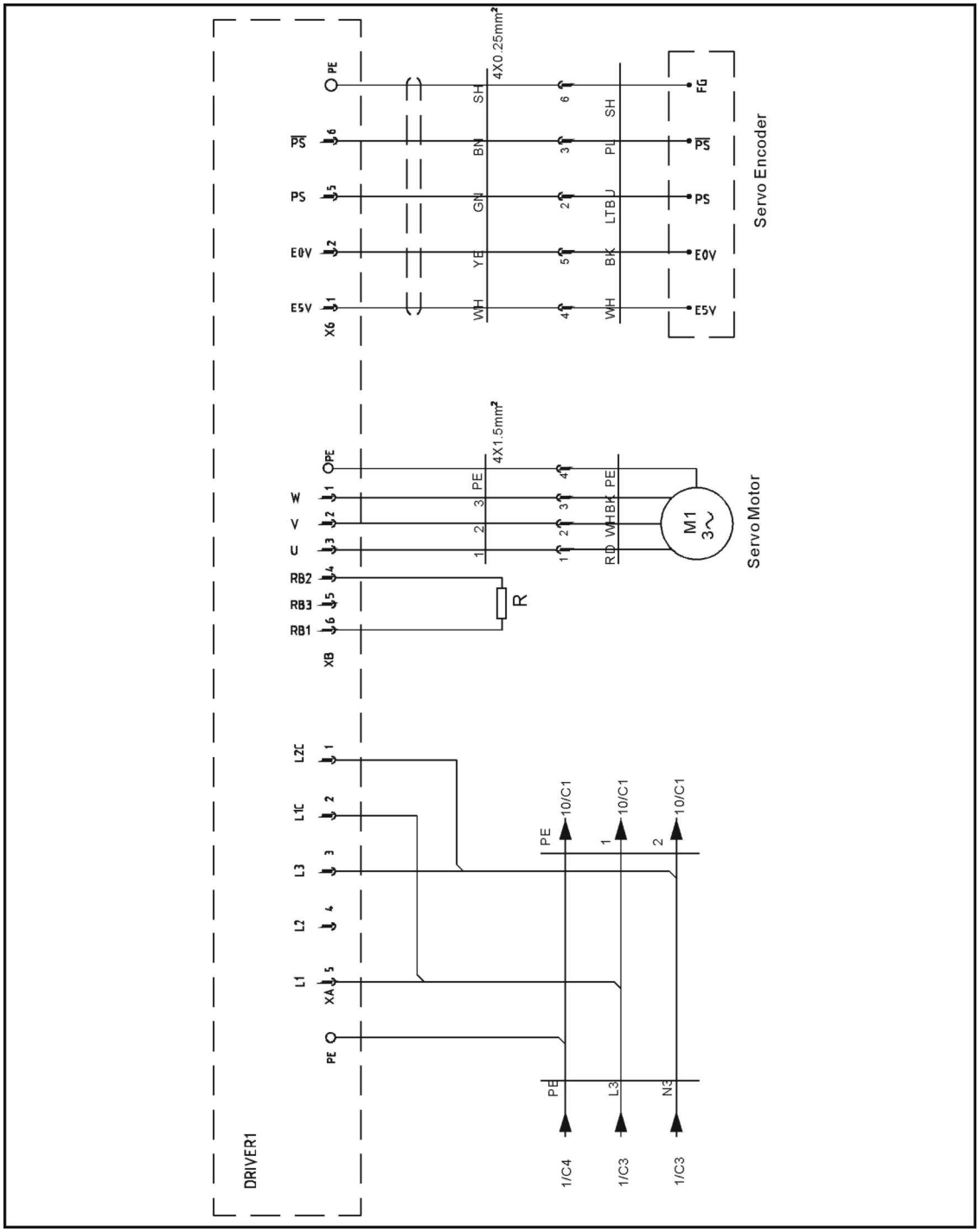

16.9 X-axis Panasonic Servo Drive I/O Wiring Diagram

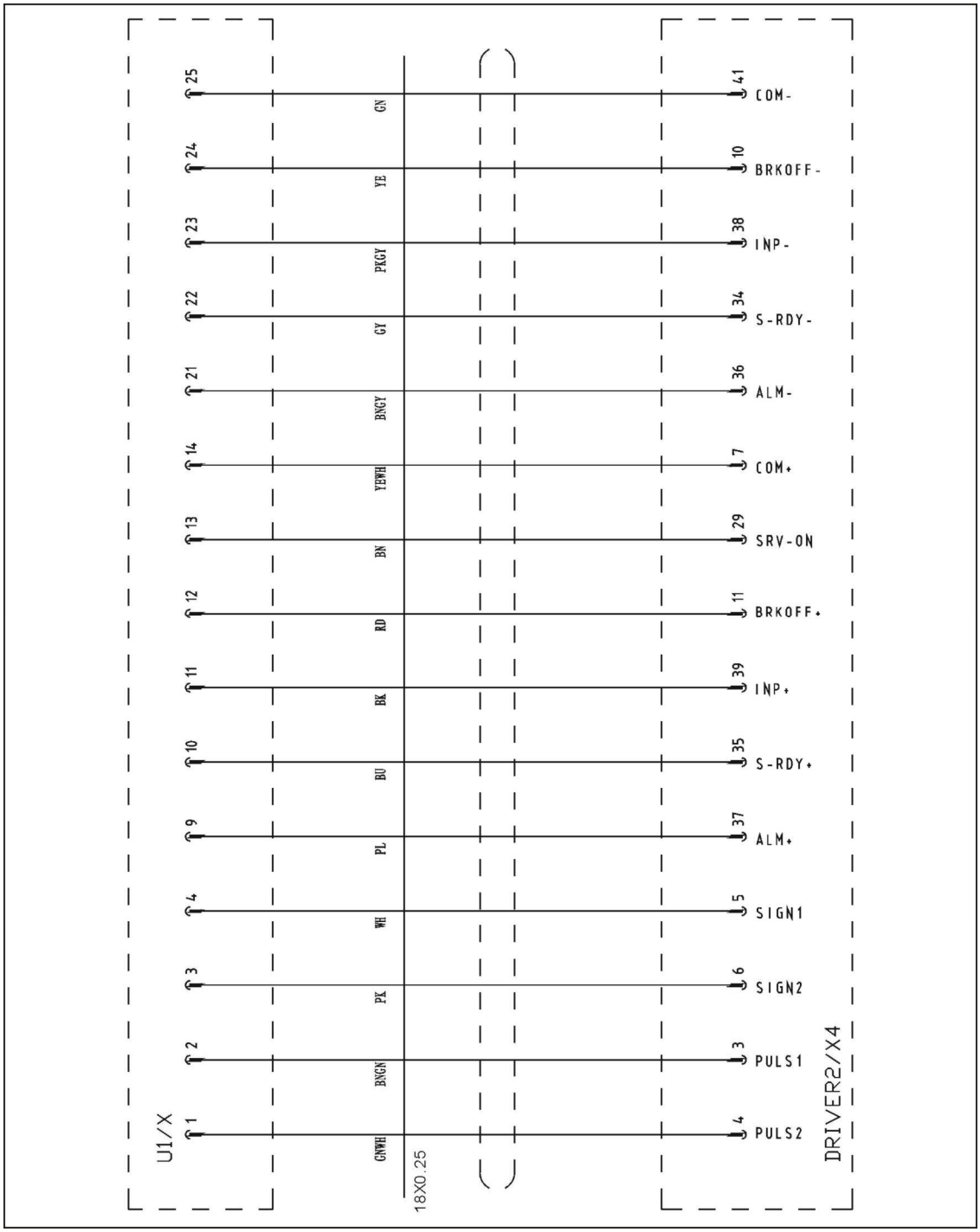

16.10 X-axis Panasonic Servo Motor Wiring Diagram

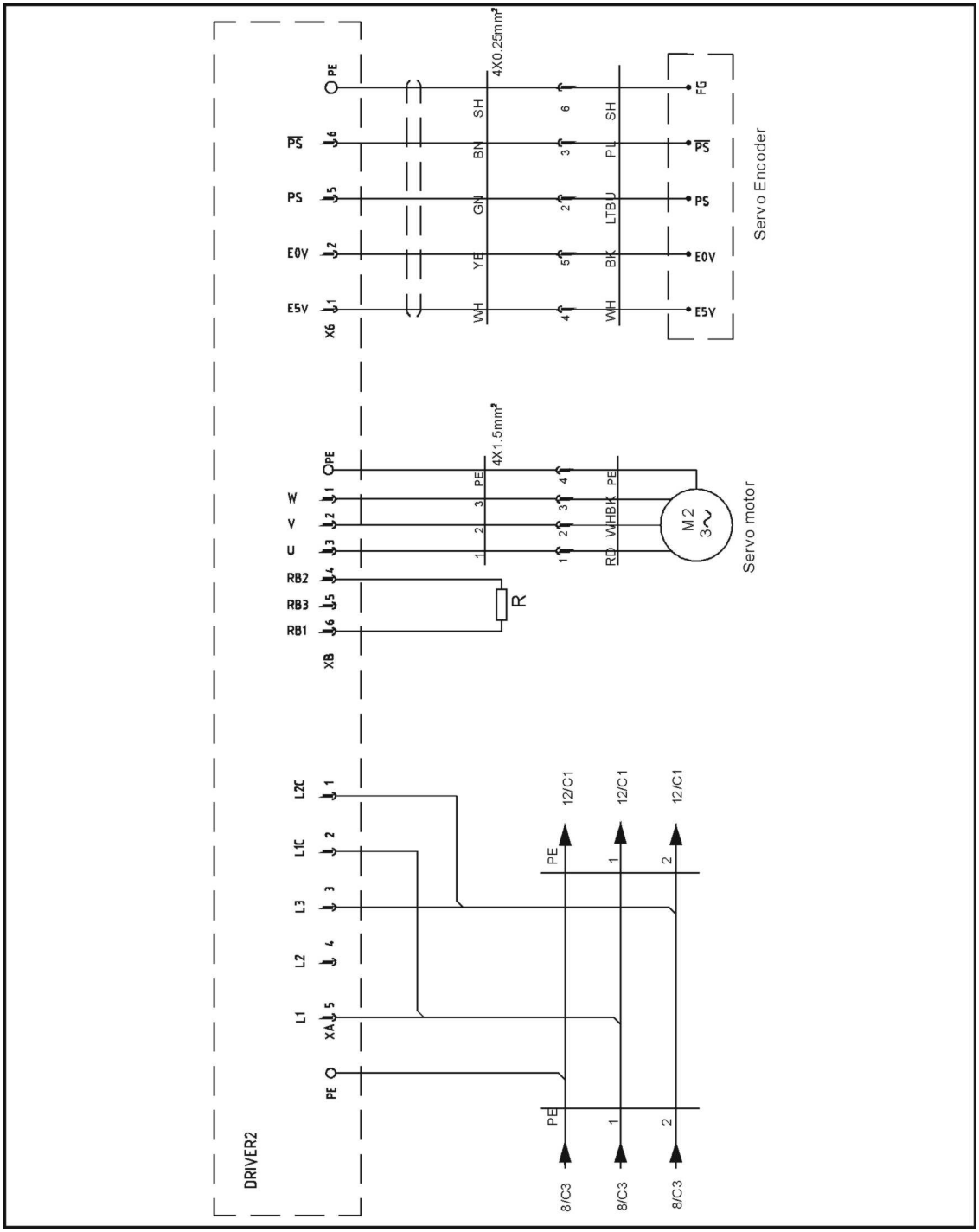

16.11 Y-axis Panasonic Servo Drive I/O Wiring Diagram

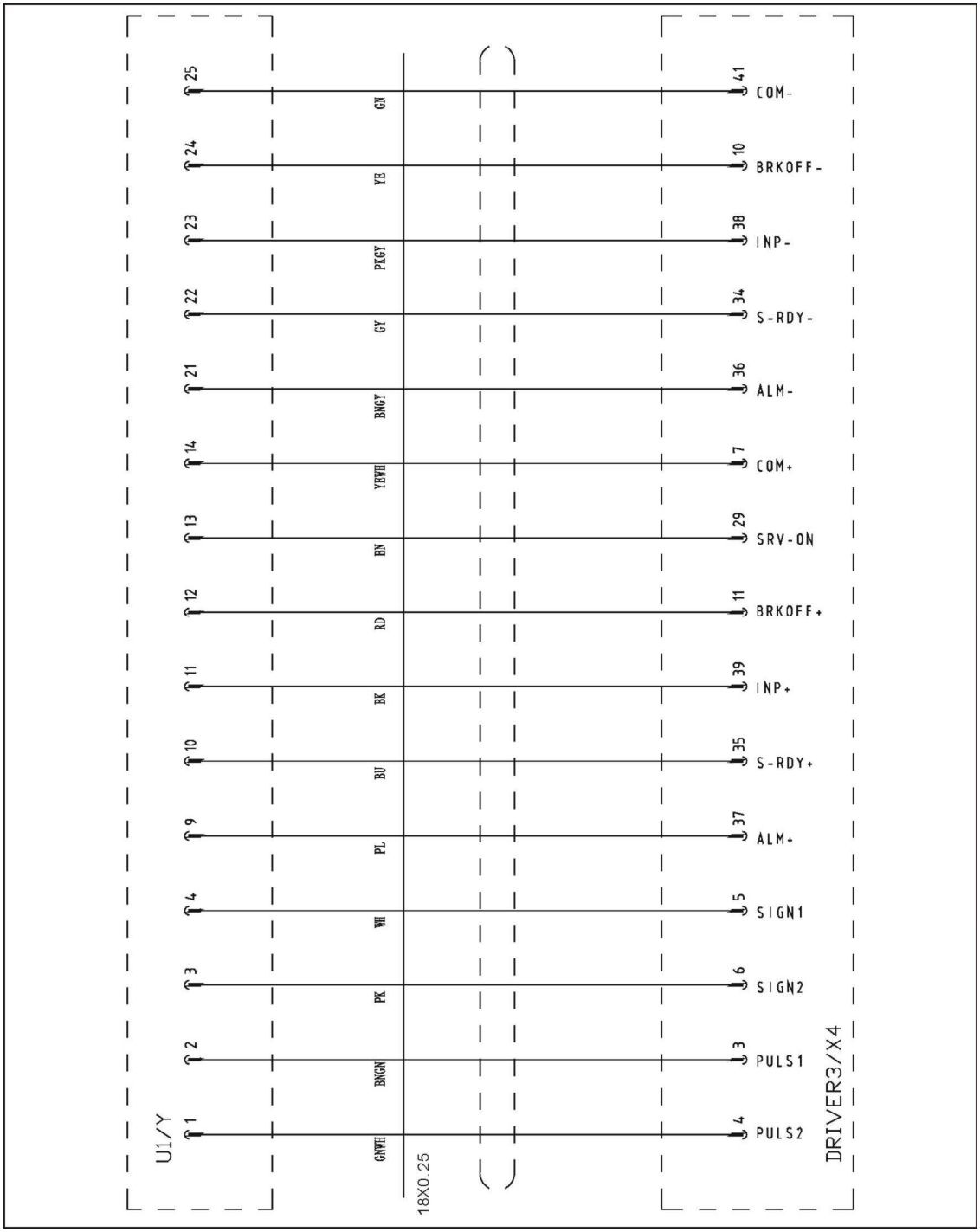

16.12 Y-axis Panasonic Servo Motor Wiring Diagram

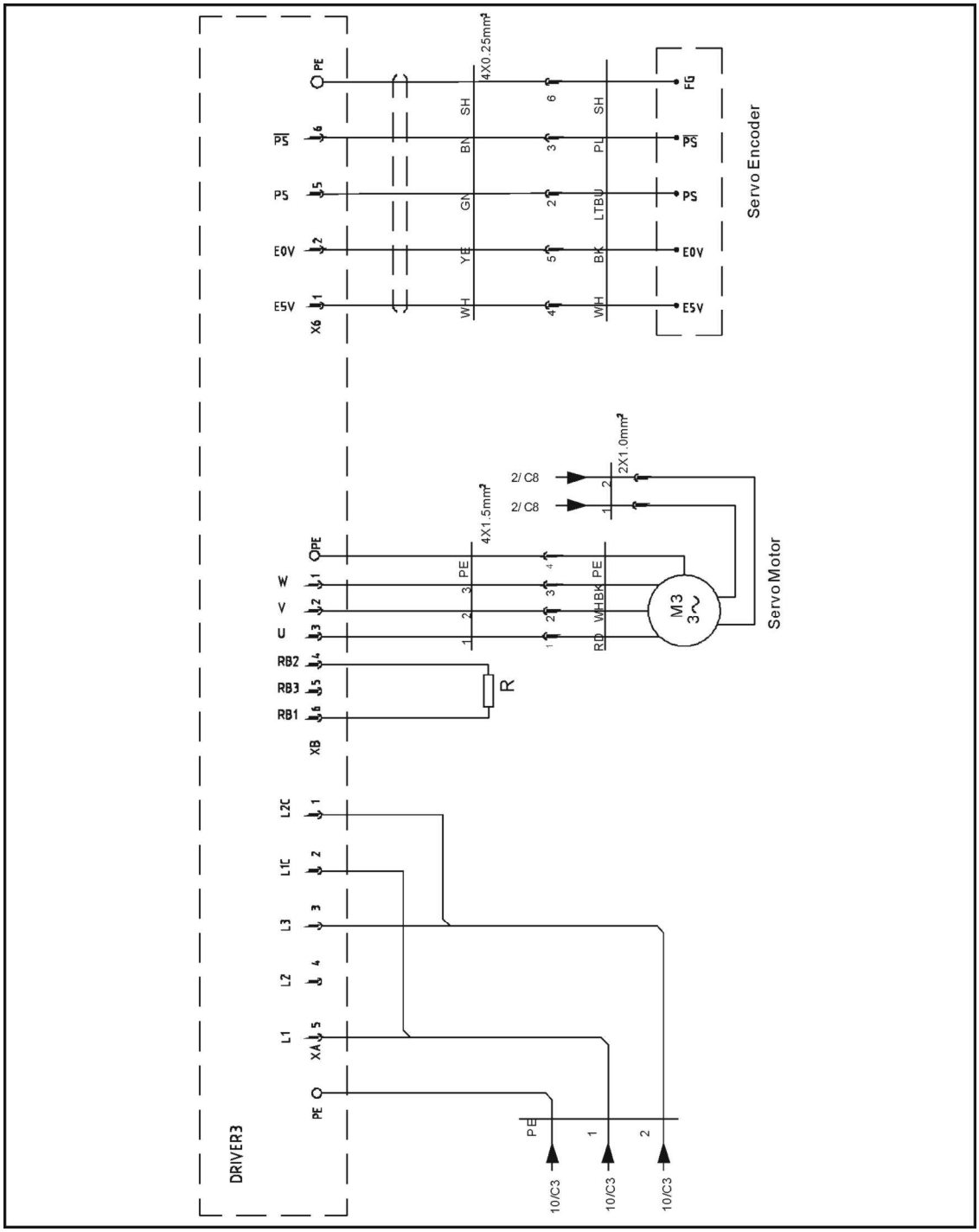

16.13 Z-axis Delta Servo Drive I/O Wiring Diagram

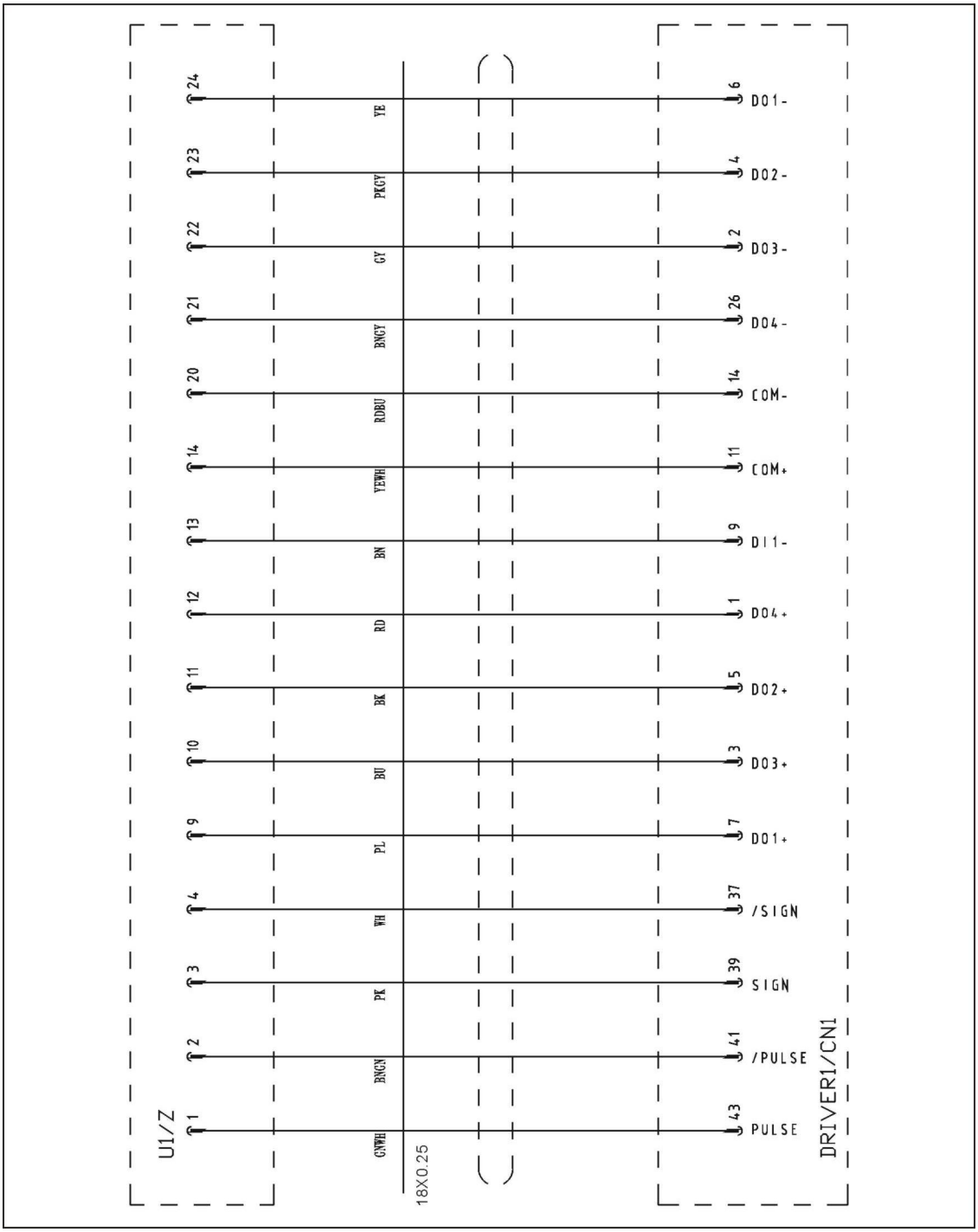

16.14 Z-axis Delta Servo Motor Wiring Diagram

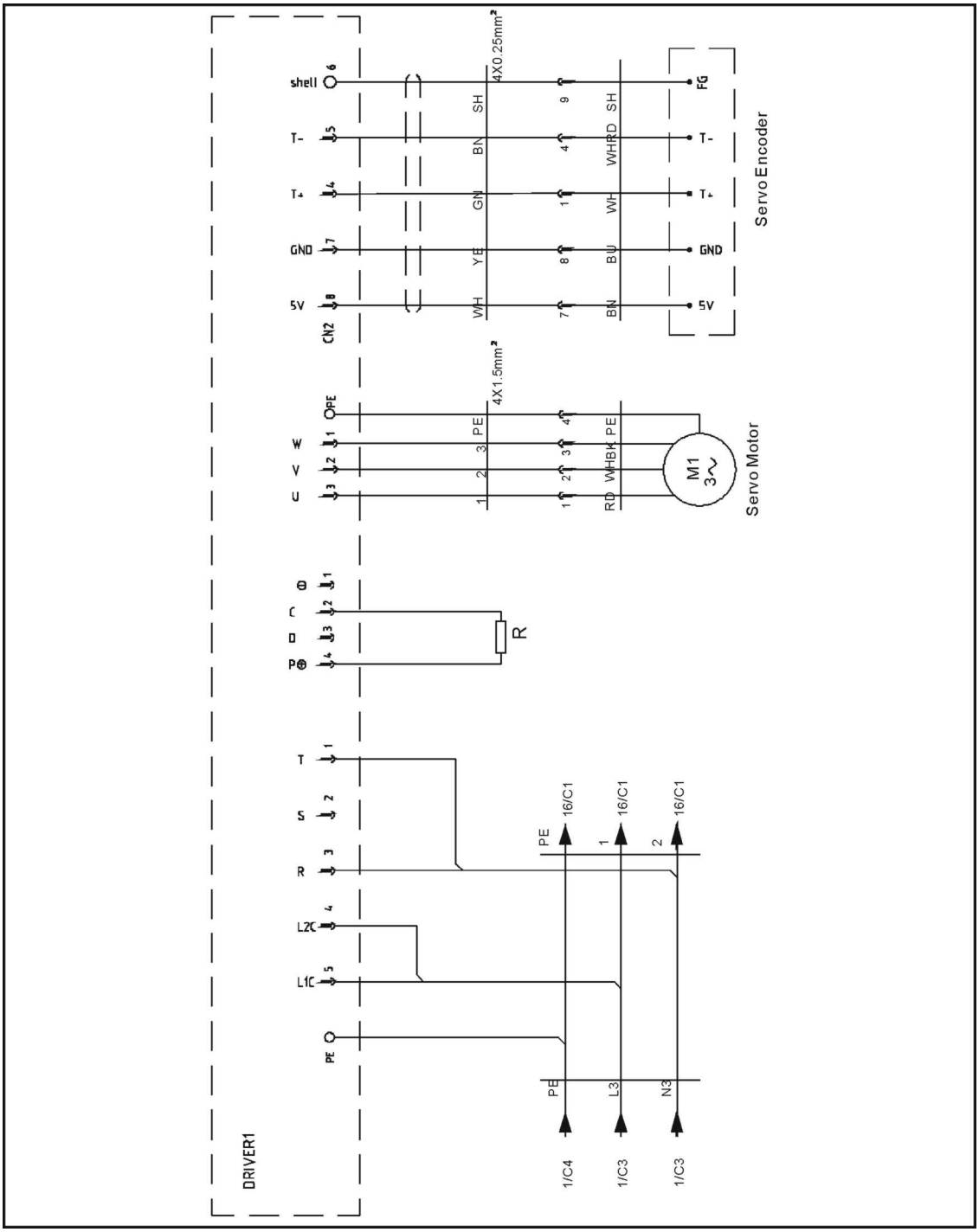

16.15 X-axis Delta Servo Drive I/O Wiring Diagram

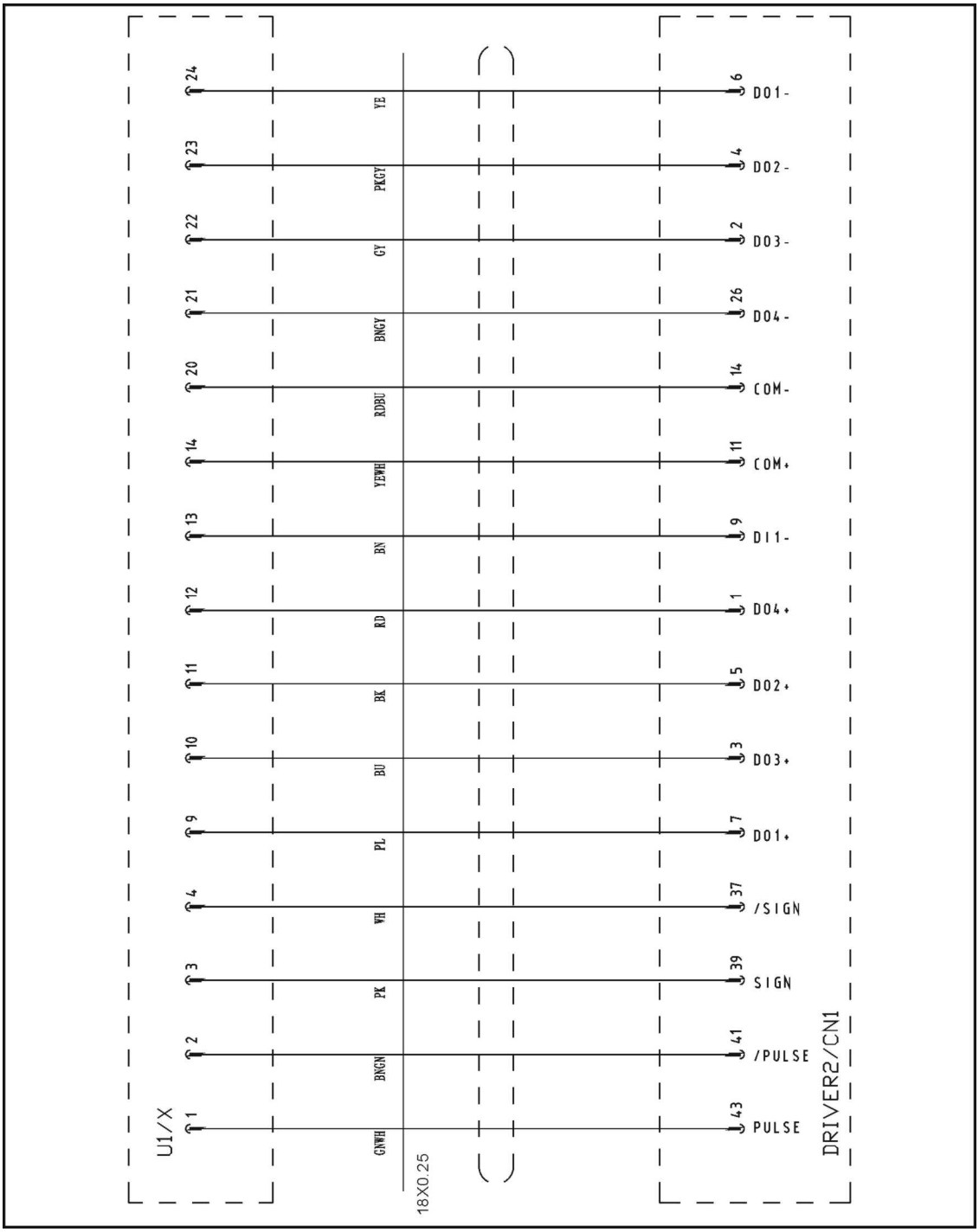

16.16 X-axis Delta Servo Motor Wiring Diagram

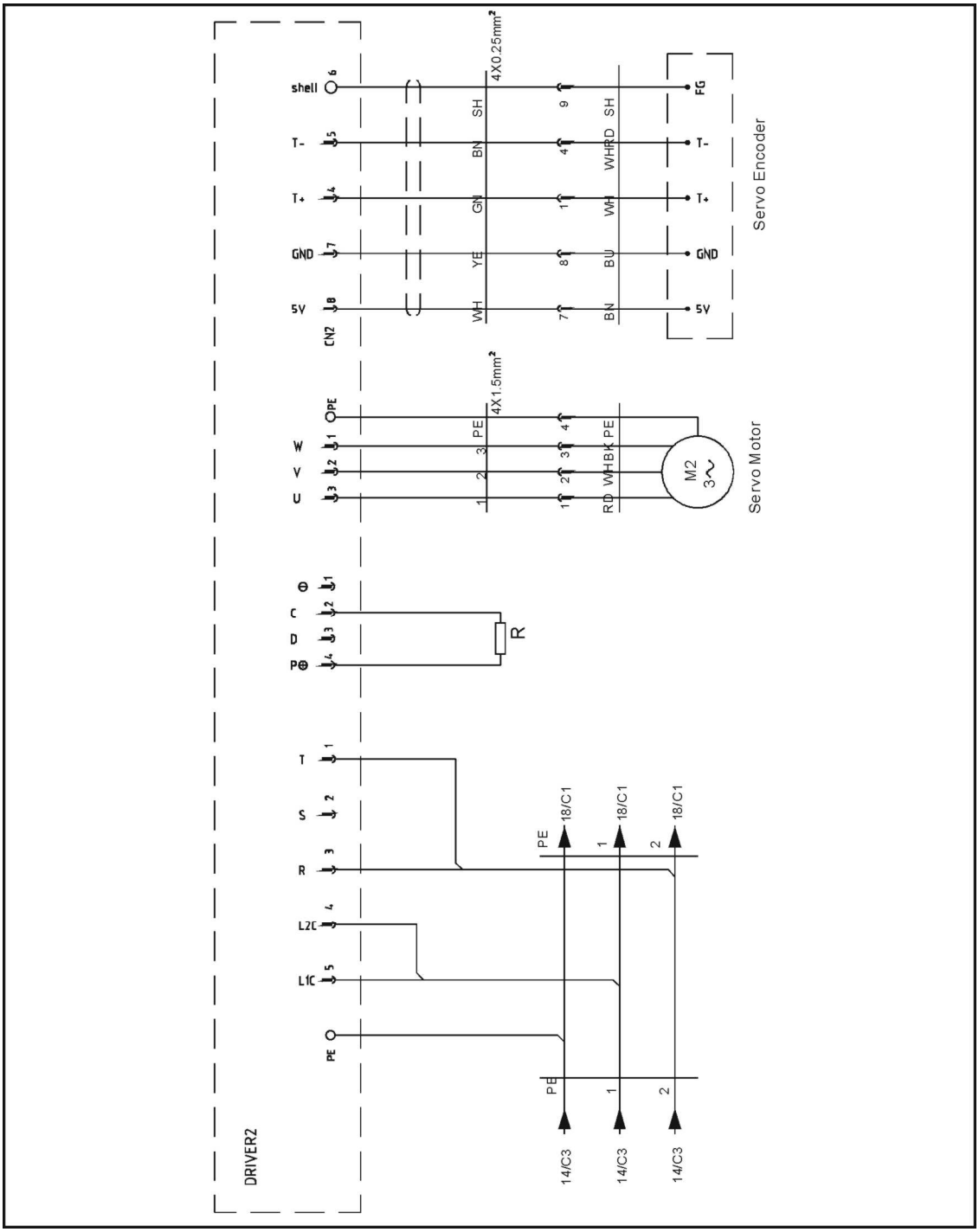

16.17 Y-axis Delta Servo Drive I/O Wiring Diagram

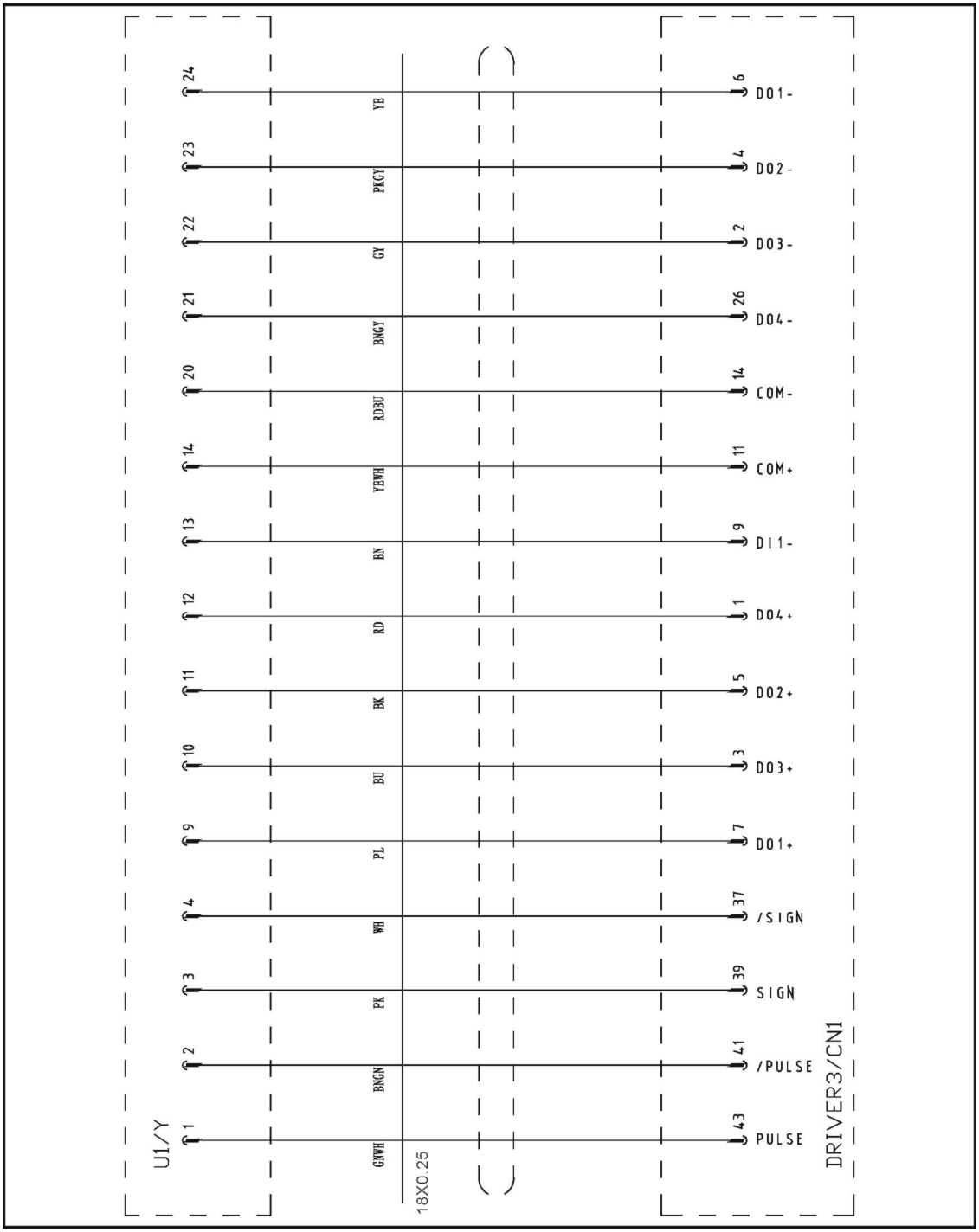

16.18 Y-axis Delta Servo Motor Wiring Diagram

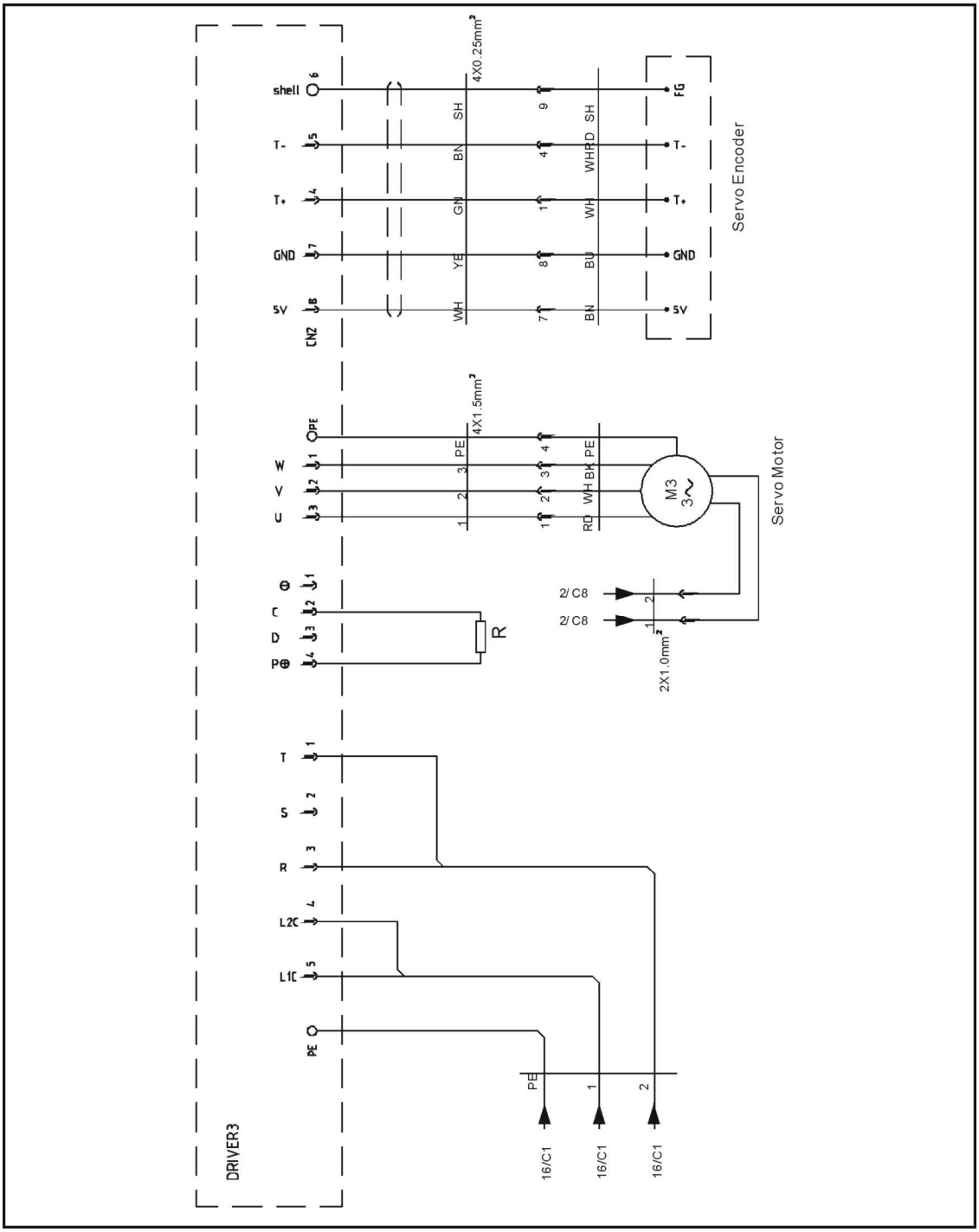

16.19 Z-axis Cuinsico Servo Drive I/O Wiring Diagram

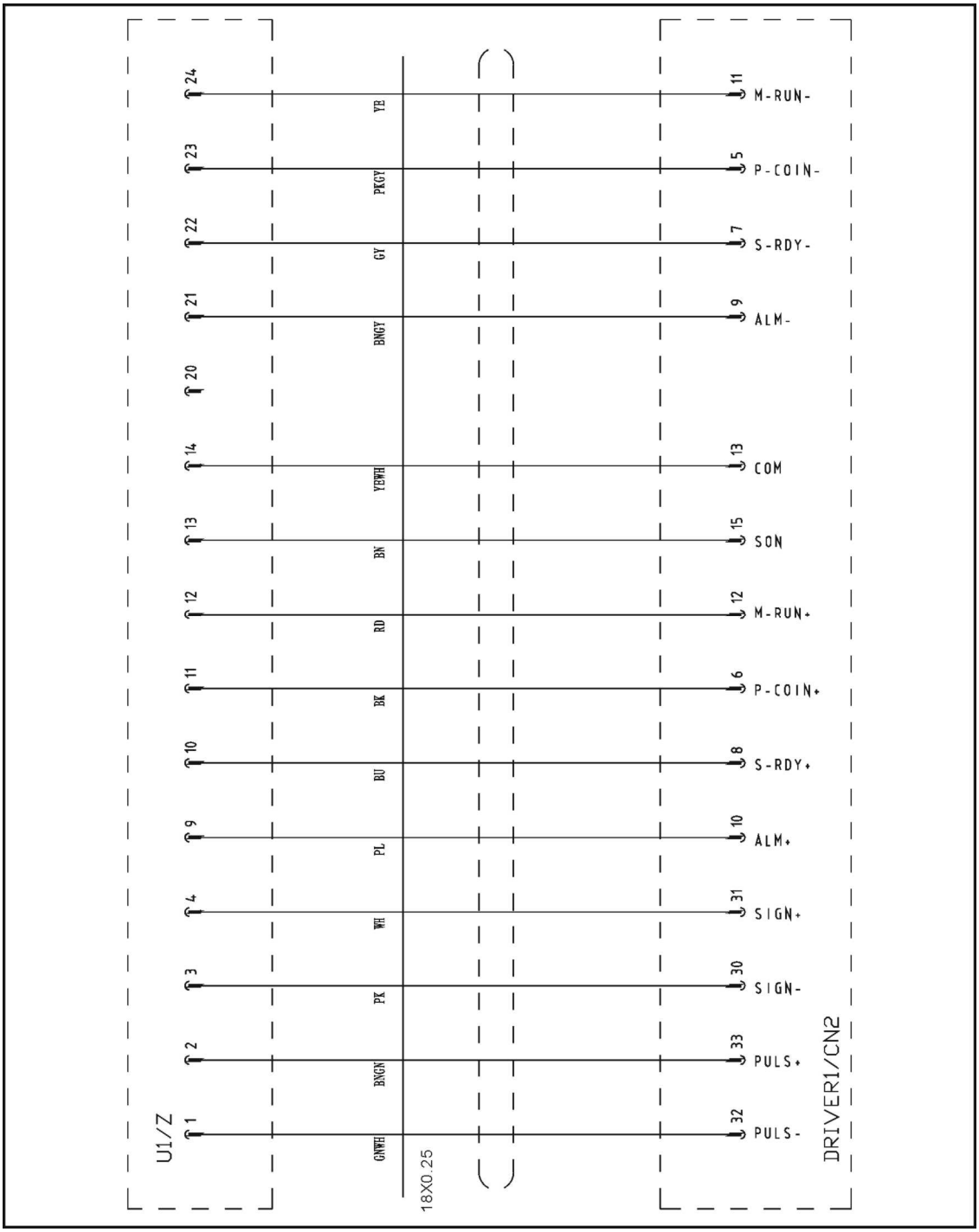

16.20 Z-axis Cuinsico Servo Motor Wiring Diagram

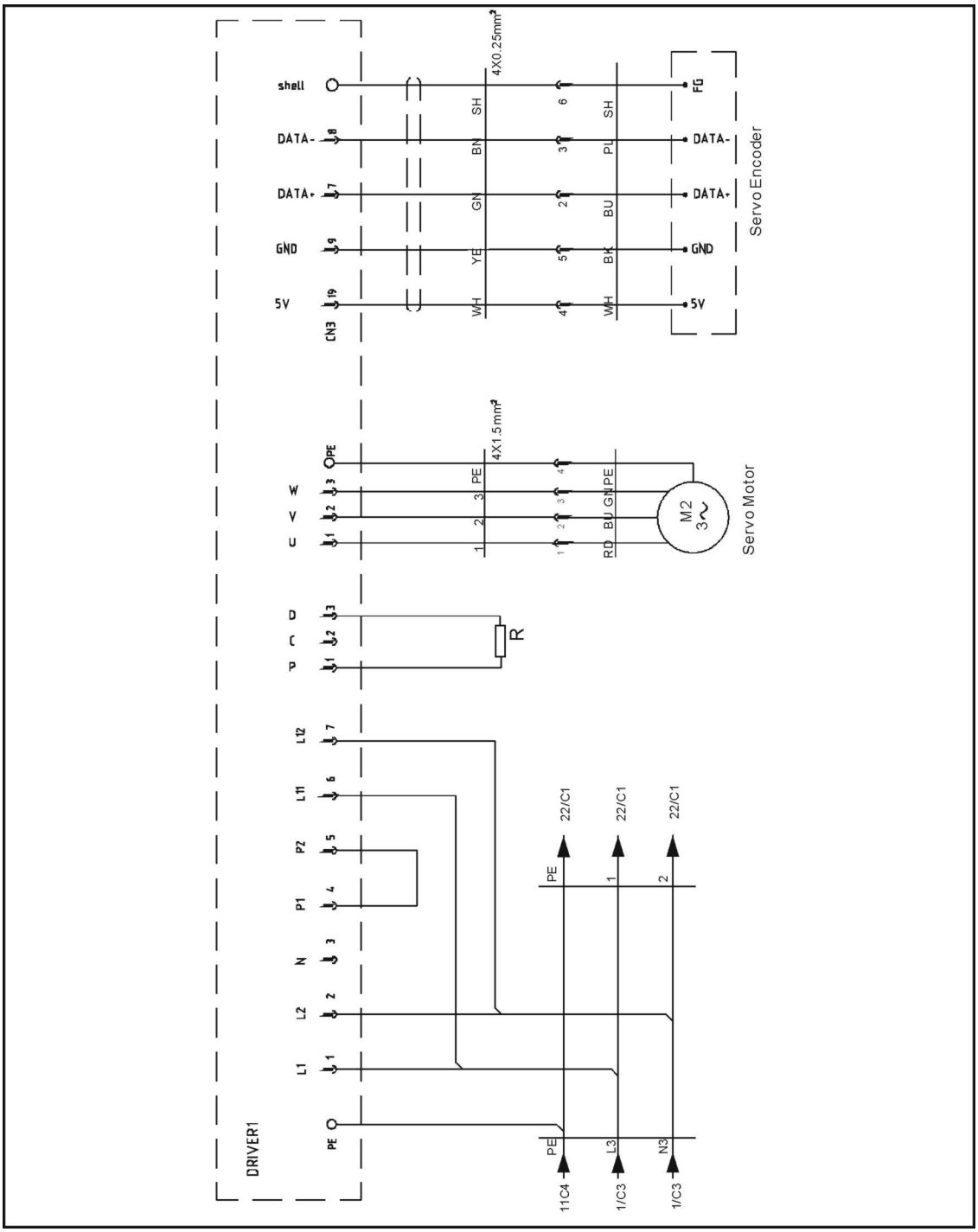

16.21 X-axis Cuinsico Servo Drive I/O Wiring Diagram

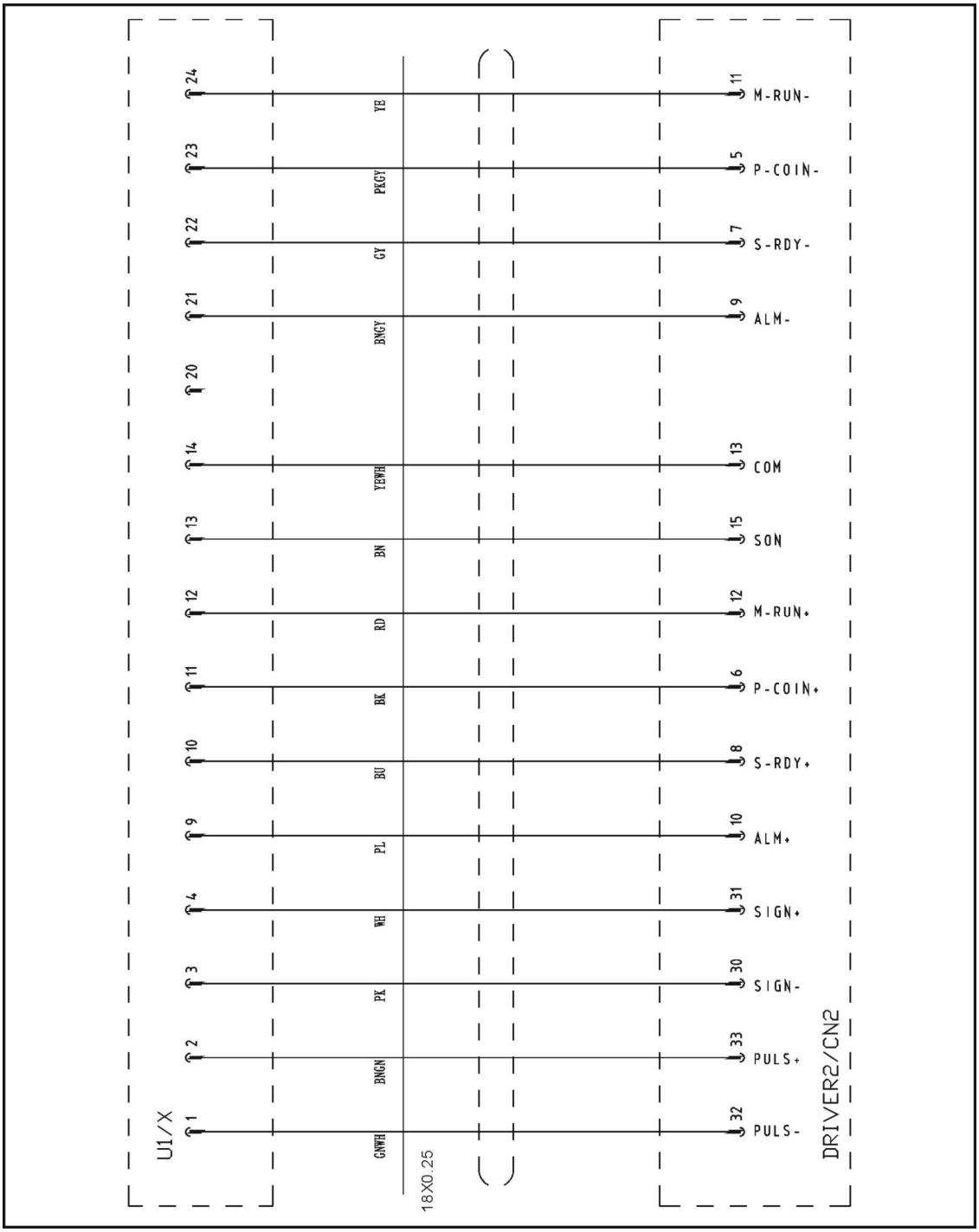

16.22 X-axis Cuinsico Servo Motor Wiring Diagram

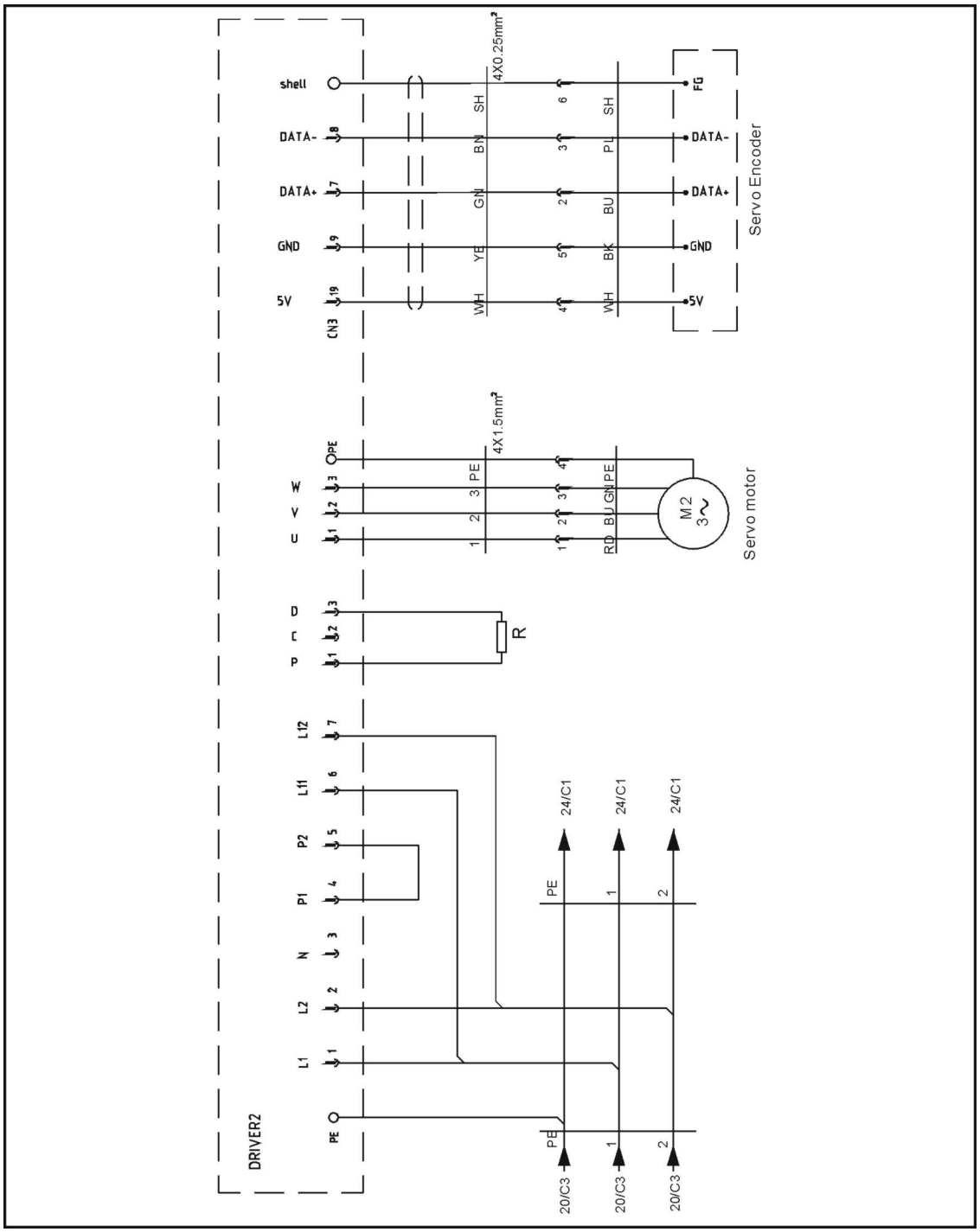

16.23 Y-axis Cuinsico Servo Drive I/O Wiring Diagram

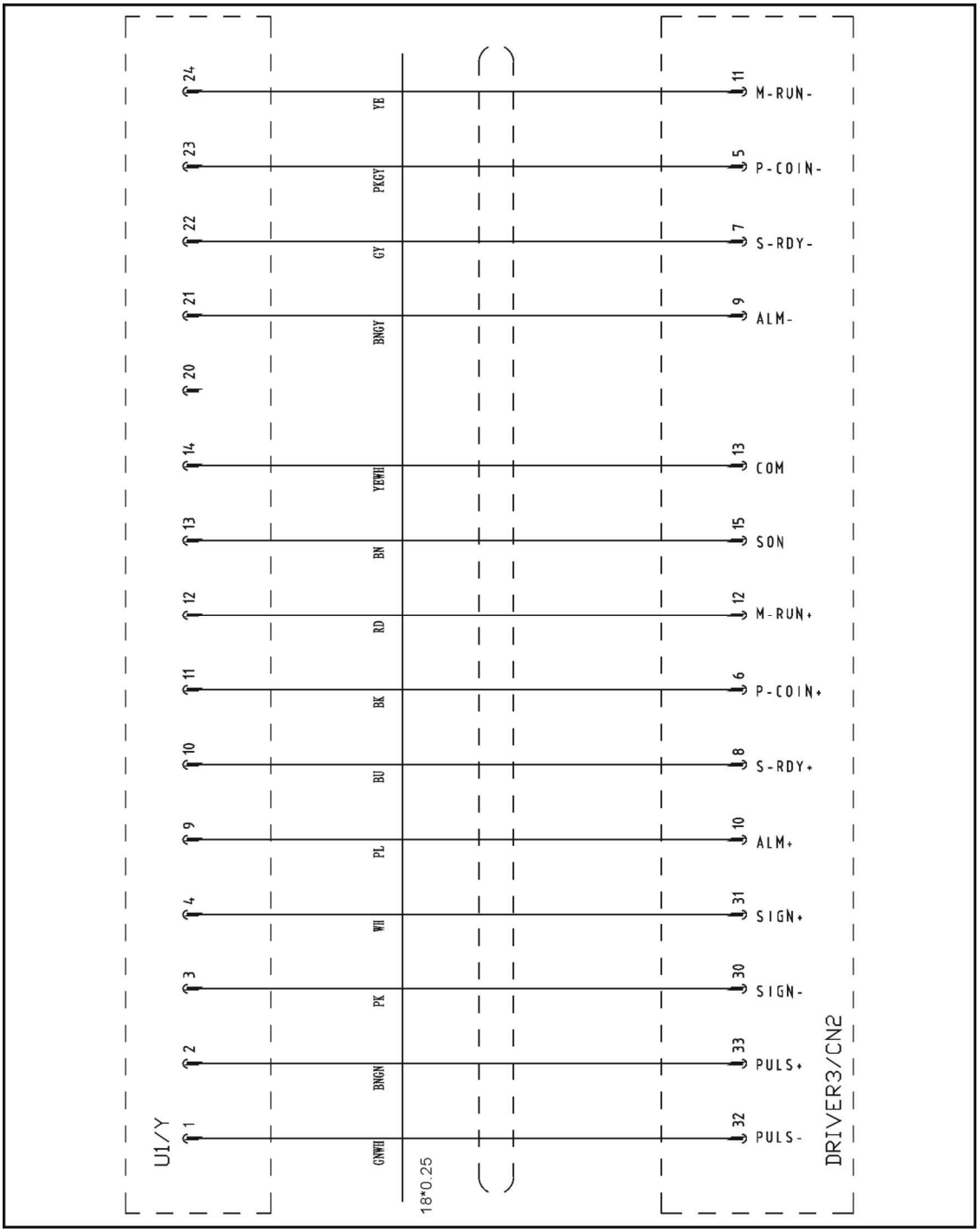

16.24 Y-axis Cuinsico Servo Motor Wiring Diagram

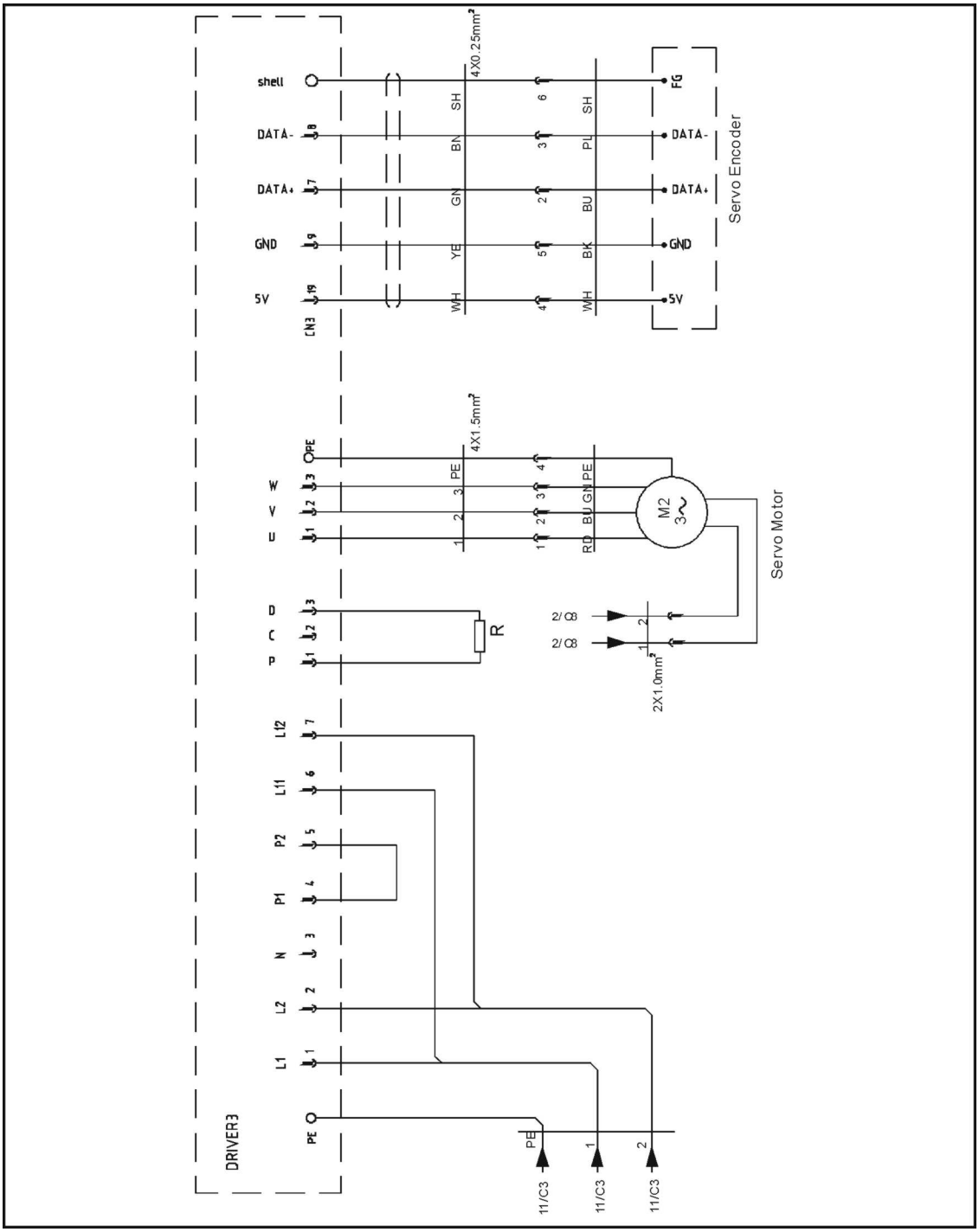

16.25 Signal Input Wiring Diagram

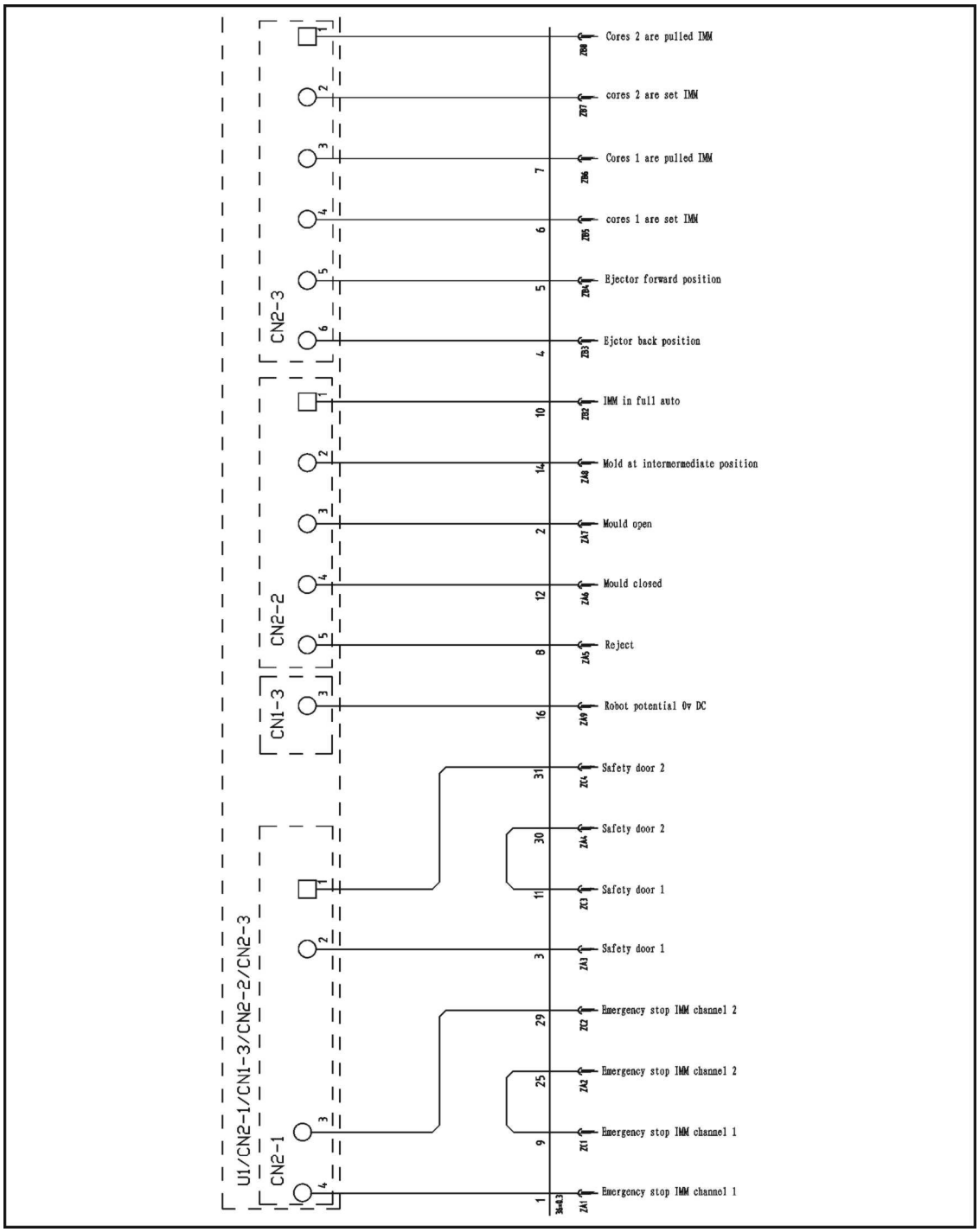

16.26 Signal Output Wiring Diagram

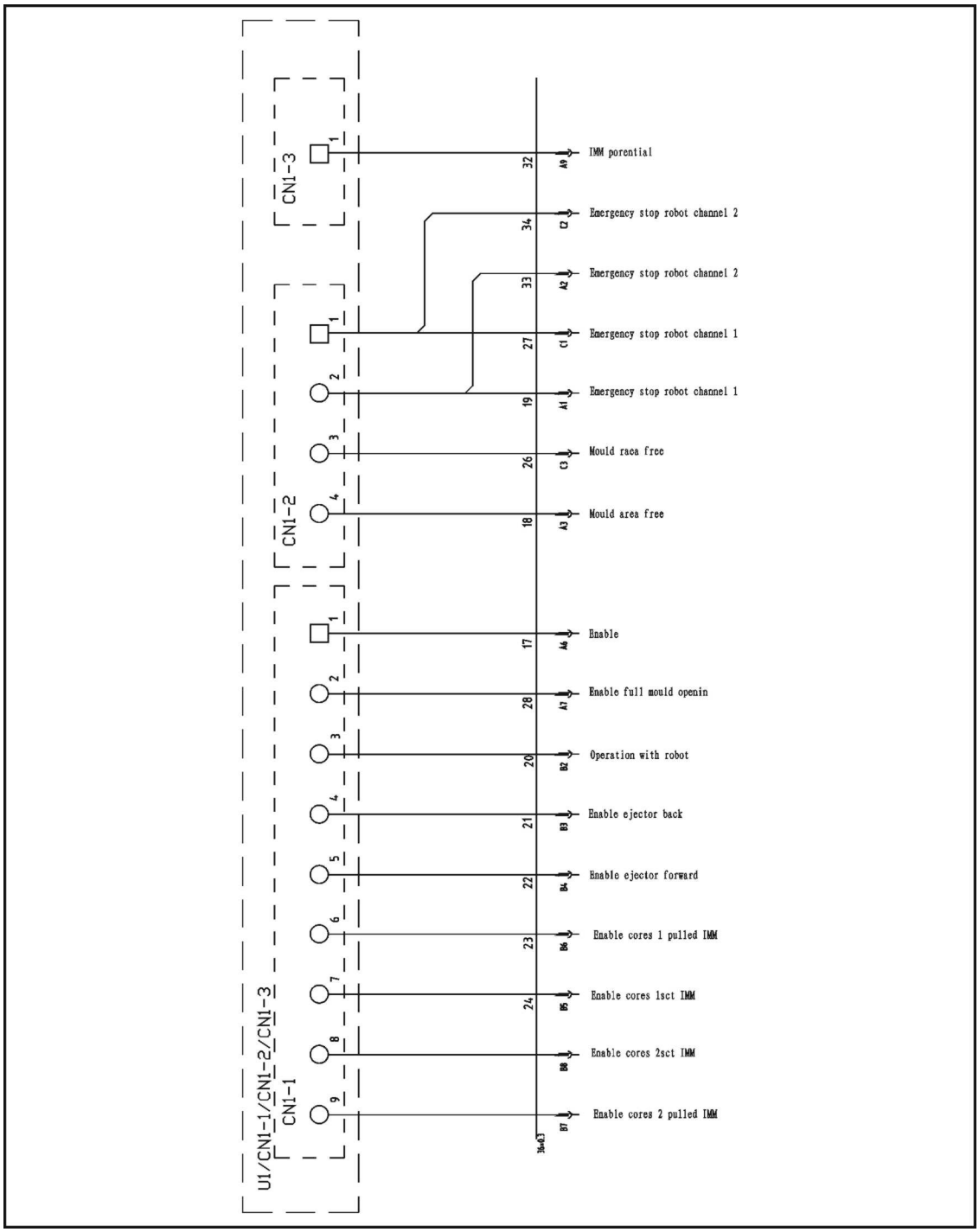

17. Electrical Control Charts (ST5-S)

17.1 Power Supply Wiring Diagram

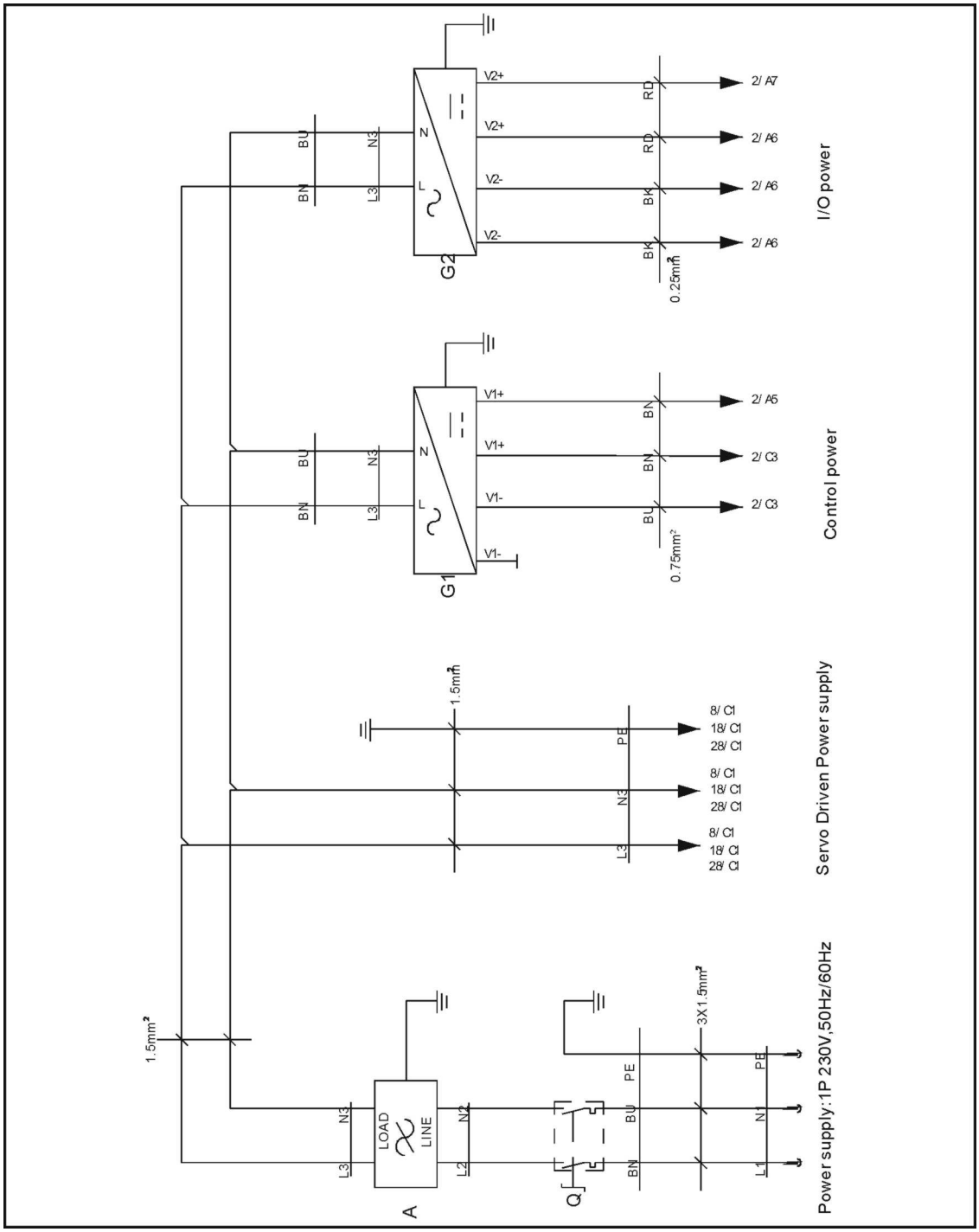

17.2 DC Power Supply Diagram

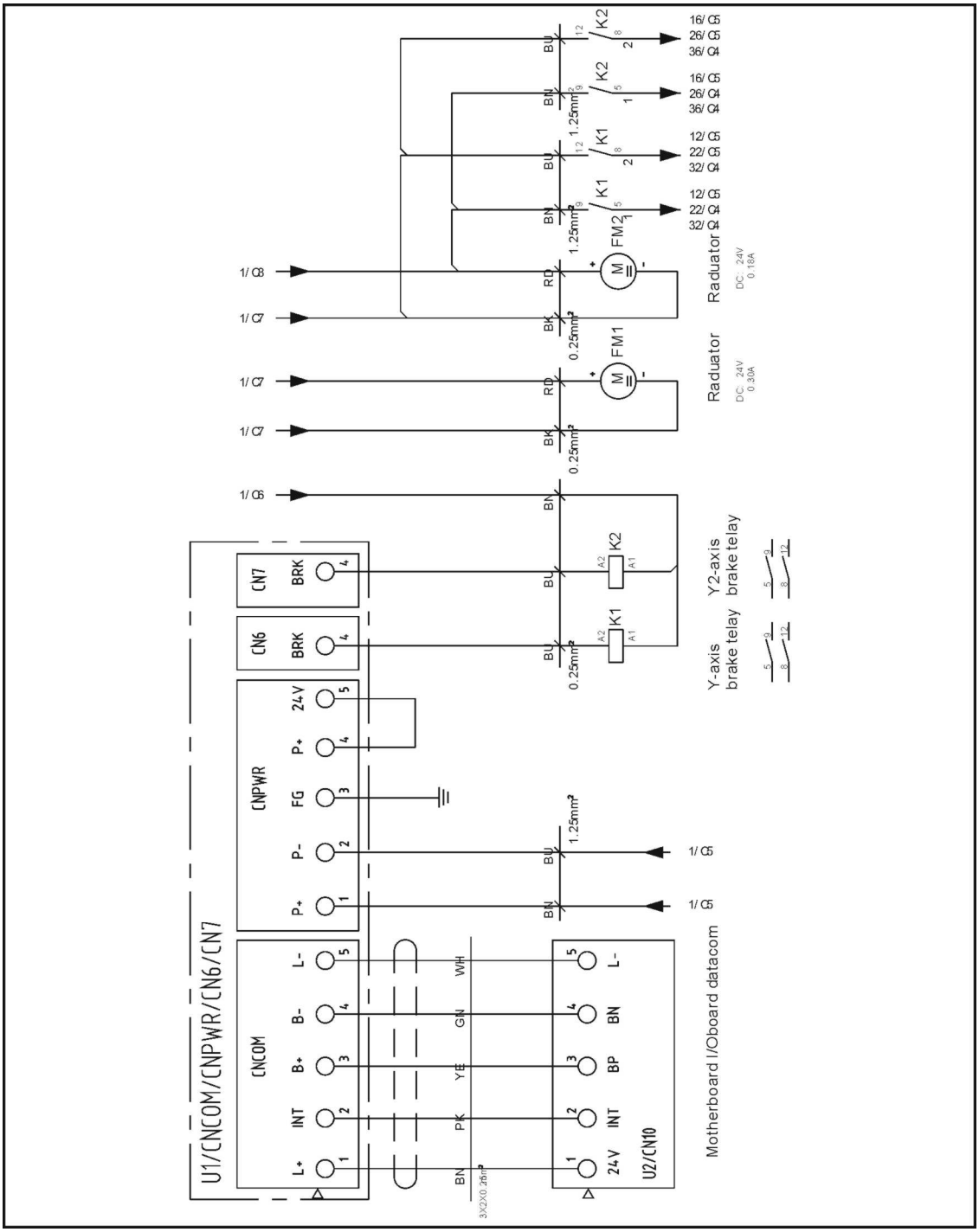

17.3 Traverse Input and Output Wiring Diagram

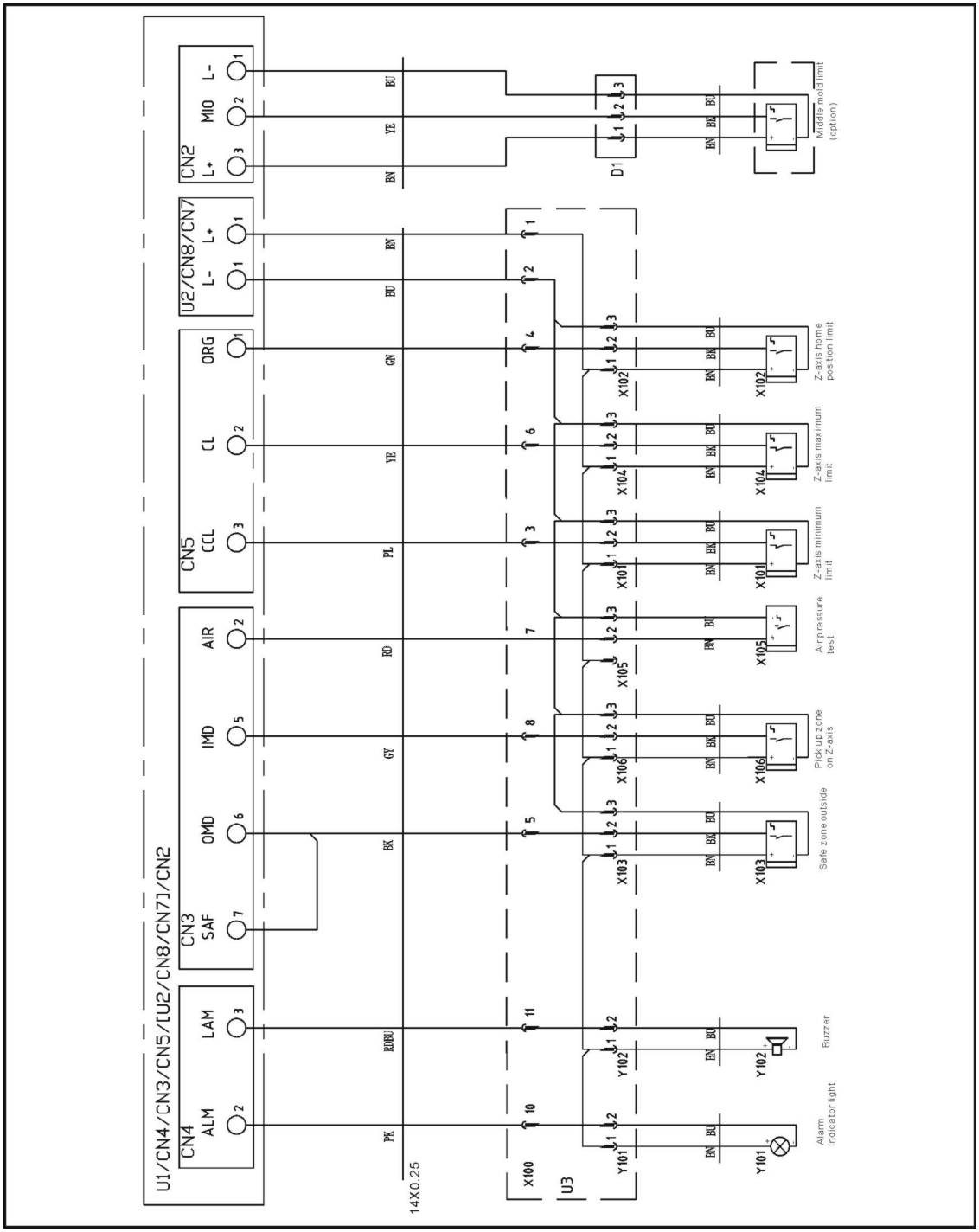

17.4 Main Arm Signal Input Wiring Diagram

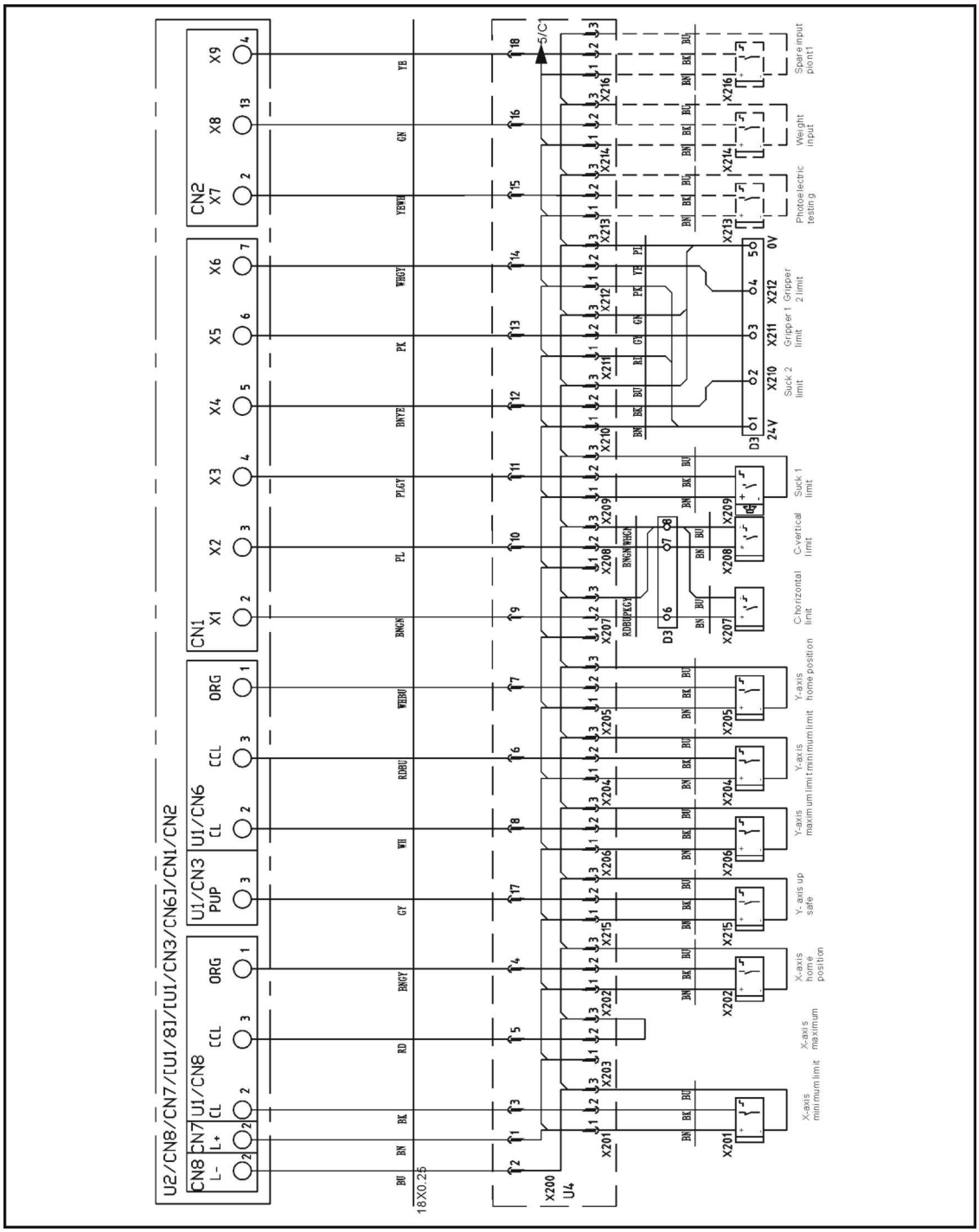

17.5 Main Arm Signal Output Wiring Diagram

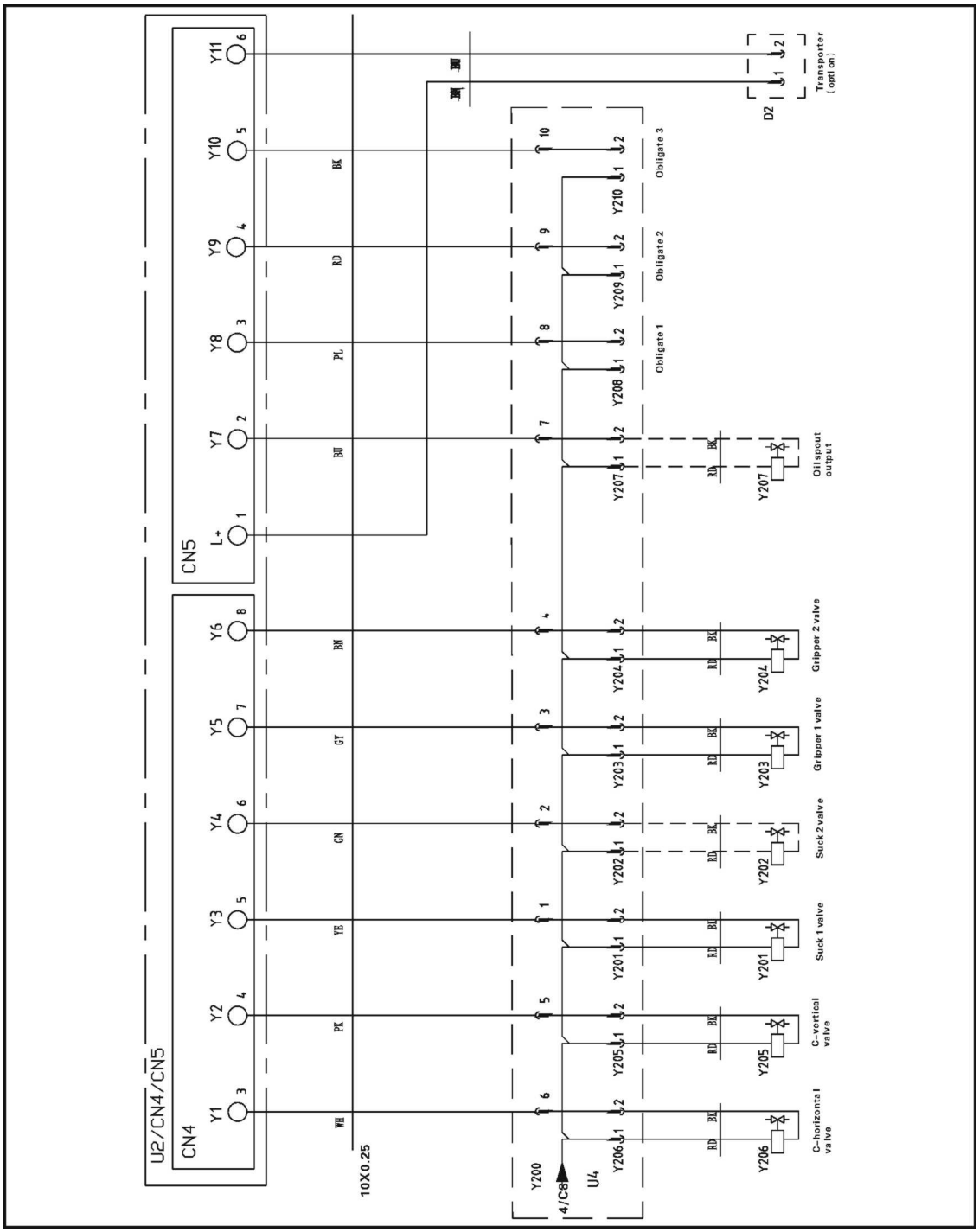

17.6 Sub-arm Signal I/O Wiring Diagram

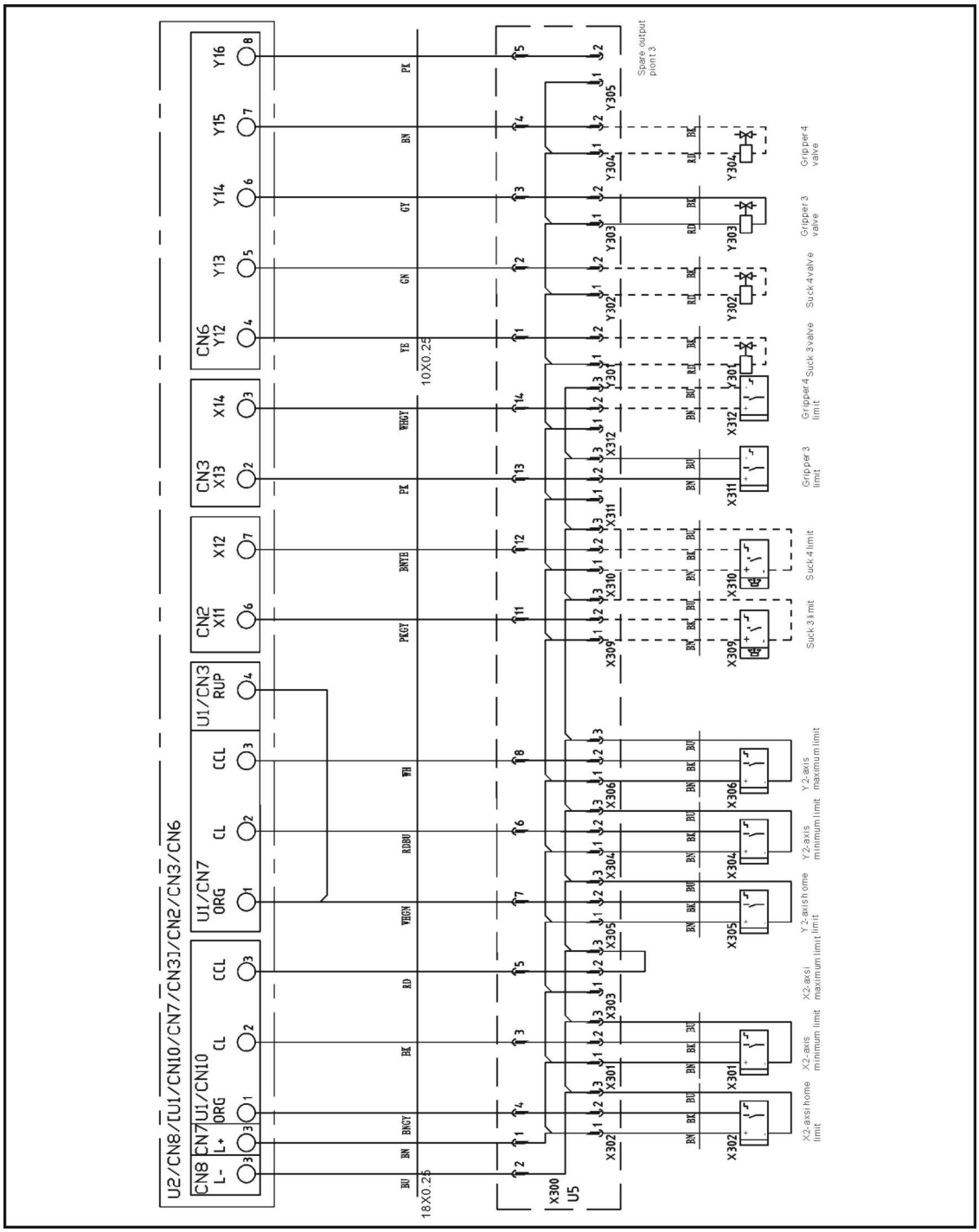

17.7 Z-axis Panasonic Servo Drive I/O Wiring Diagram

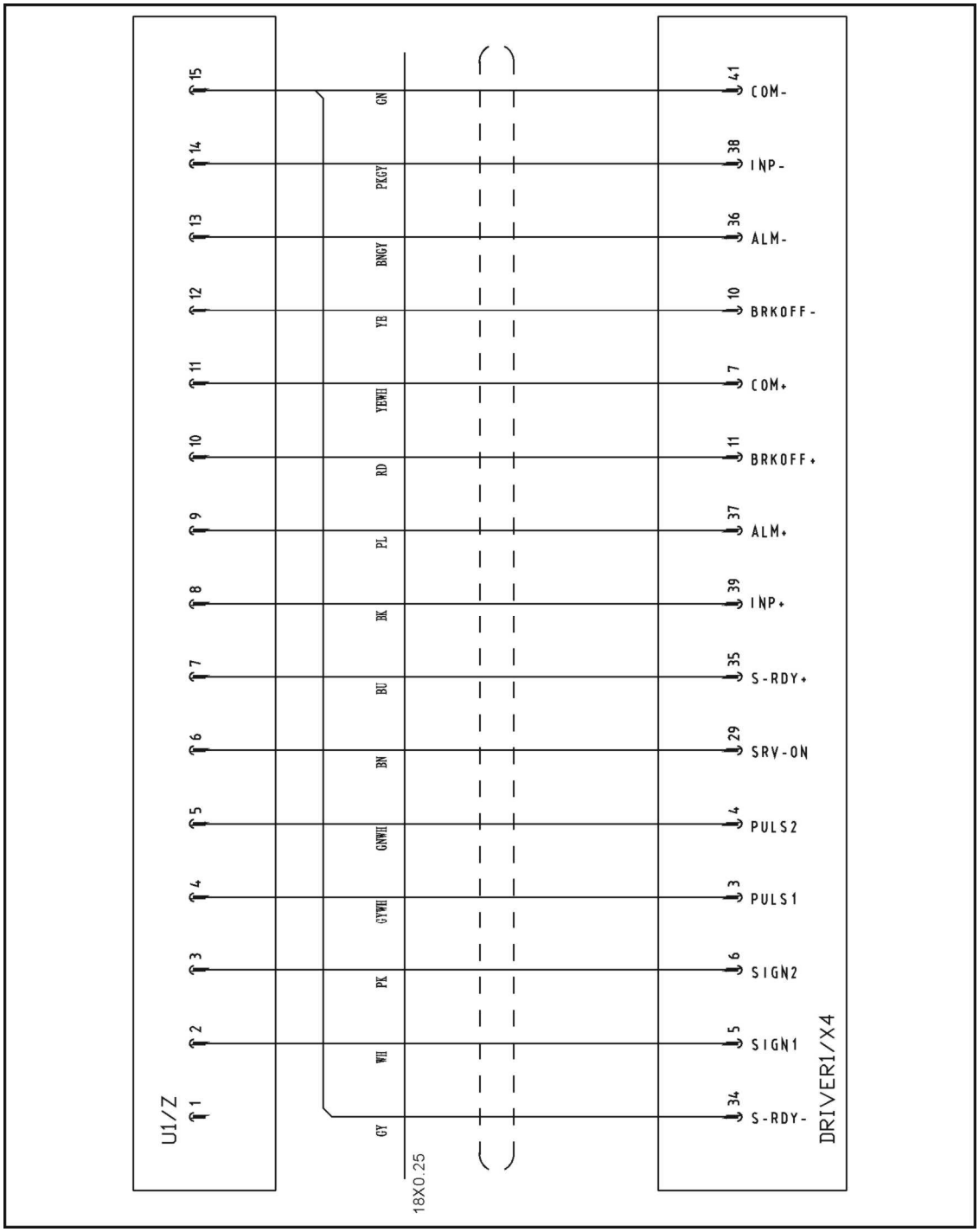

17.8 Z-axis Panasonic Servo Motor Wiring Diagram

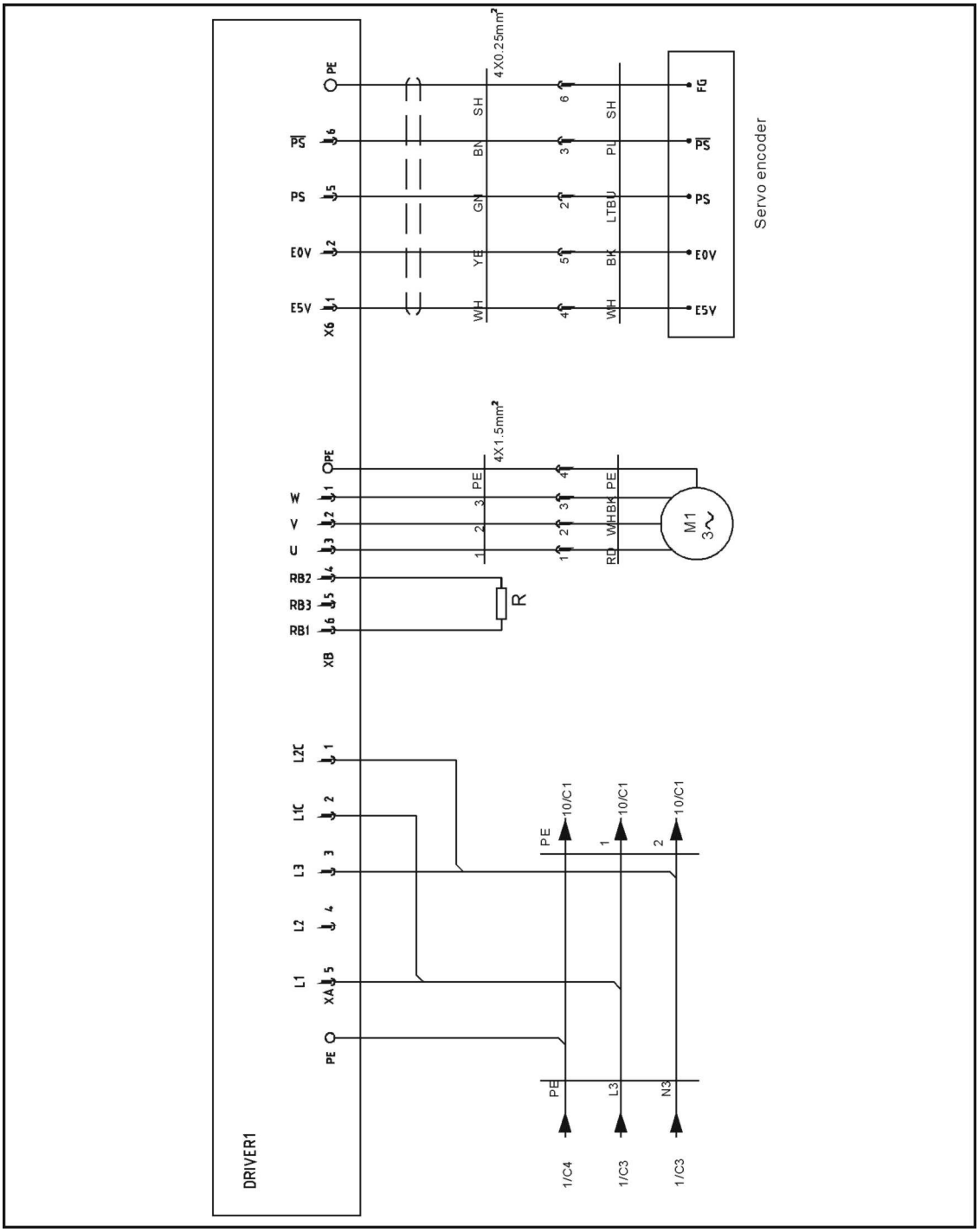

17.9 X-axis Panasonic Servo Drive I/O Wiring Diagram

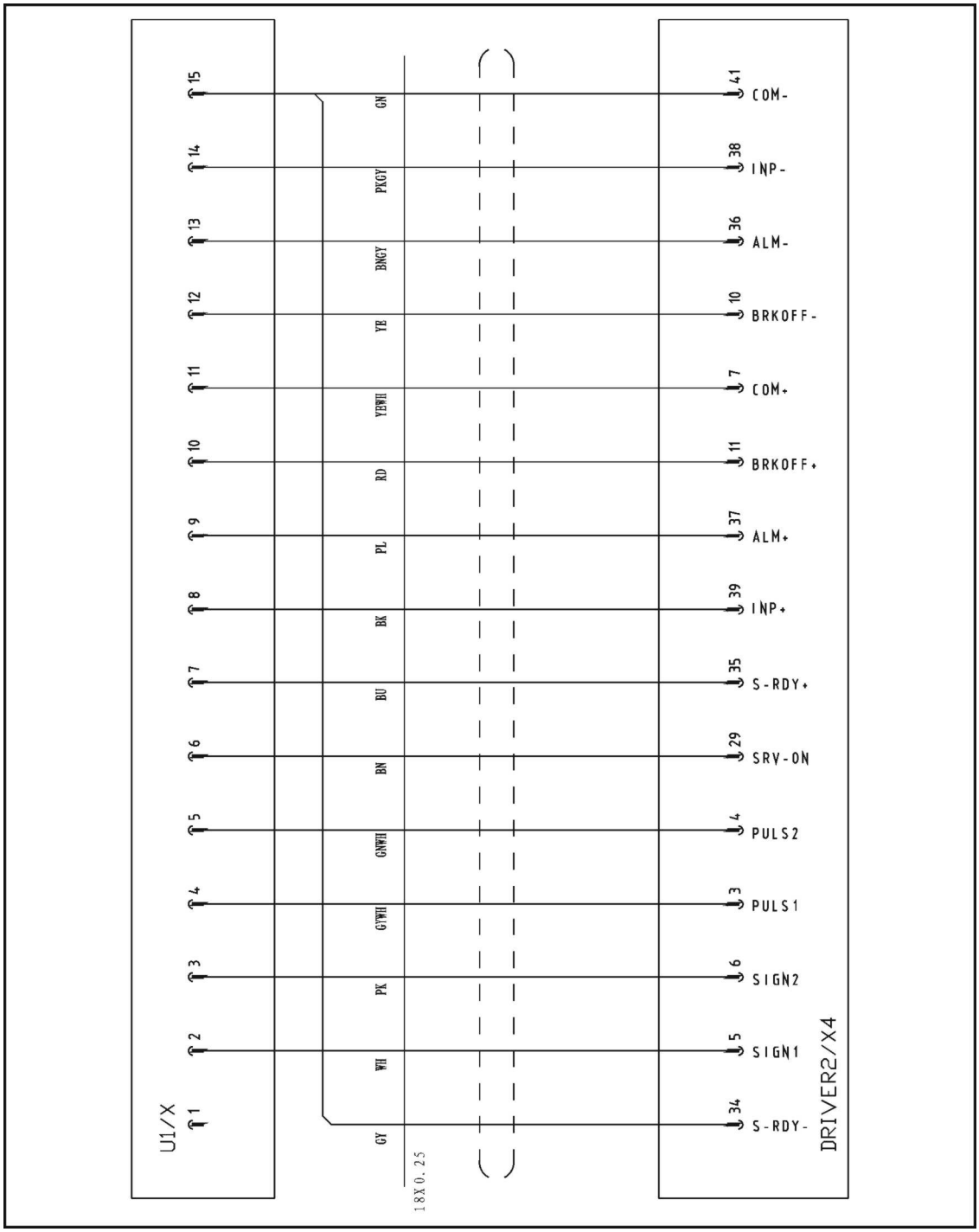

17.10 X-axis Panasonic Servo Motor Wiring Diagram

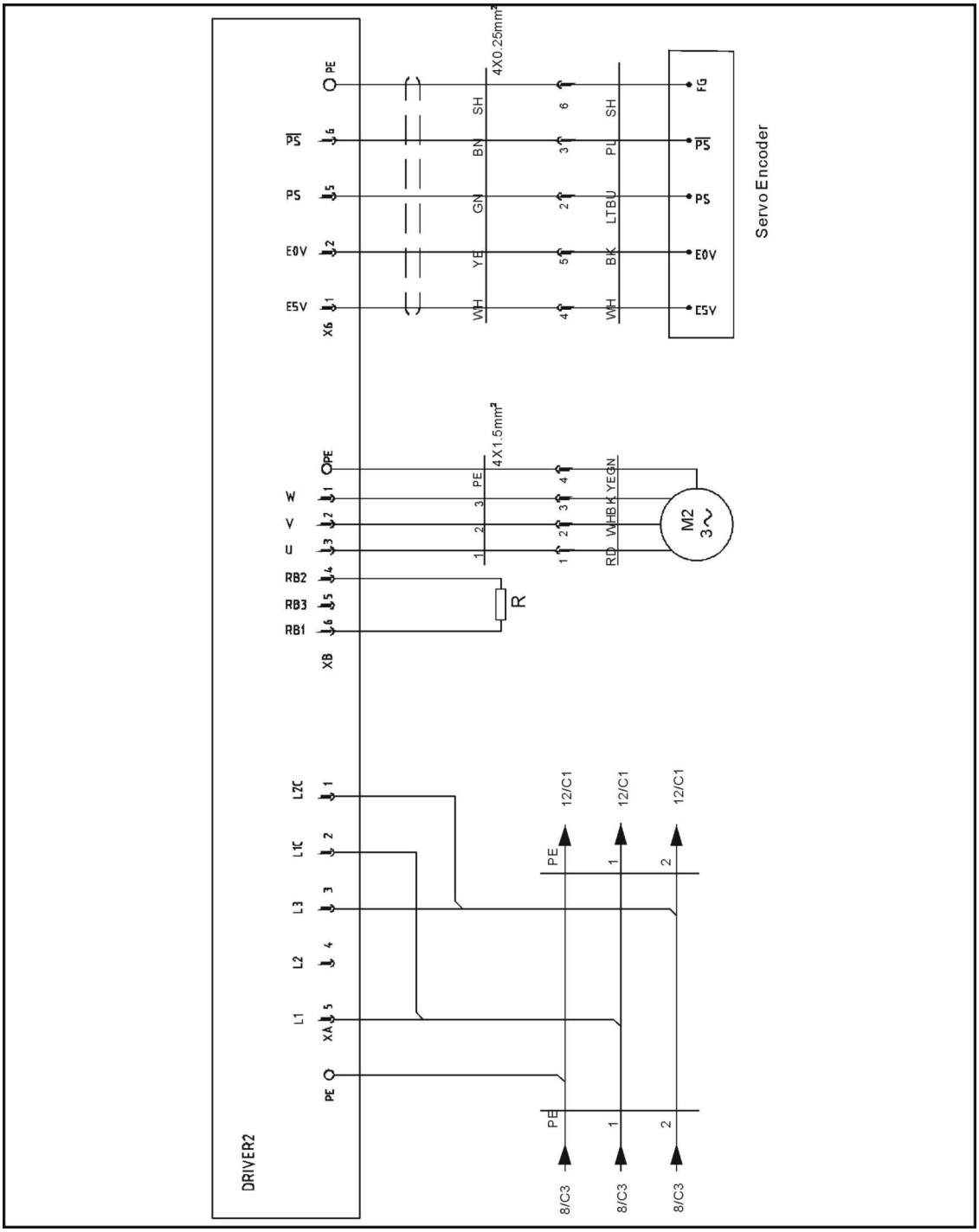

17.11 Y-axis Panasonic Servo Drive I/O Wiring Diagram

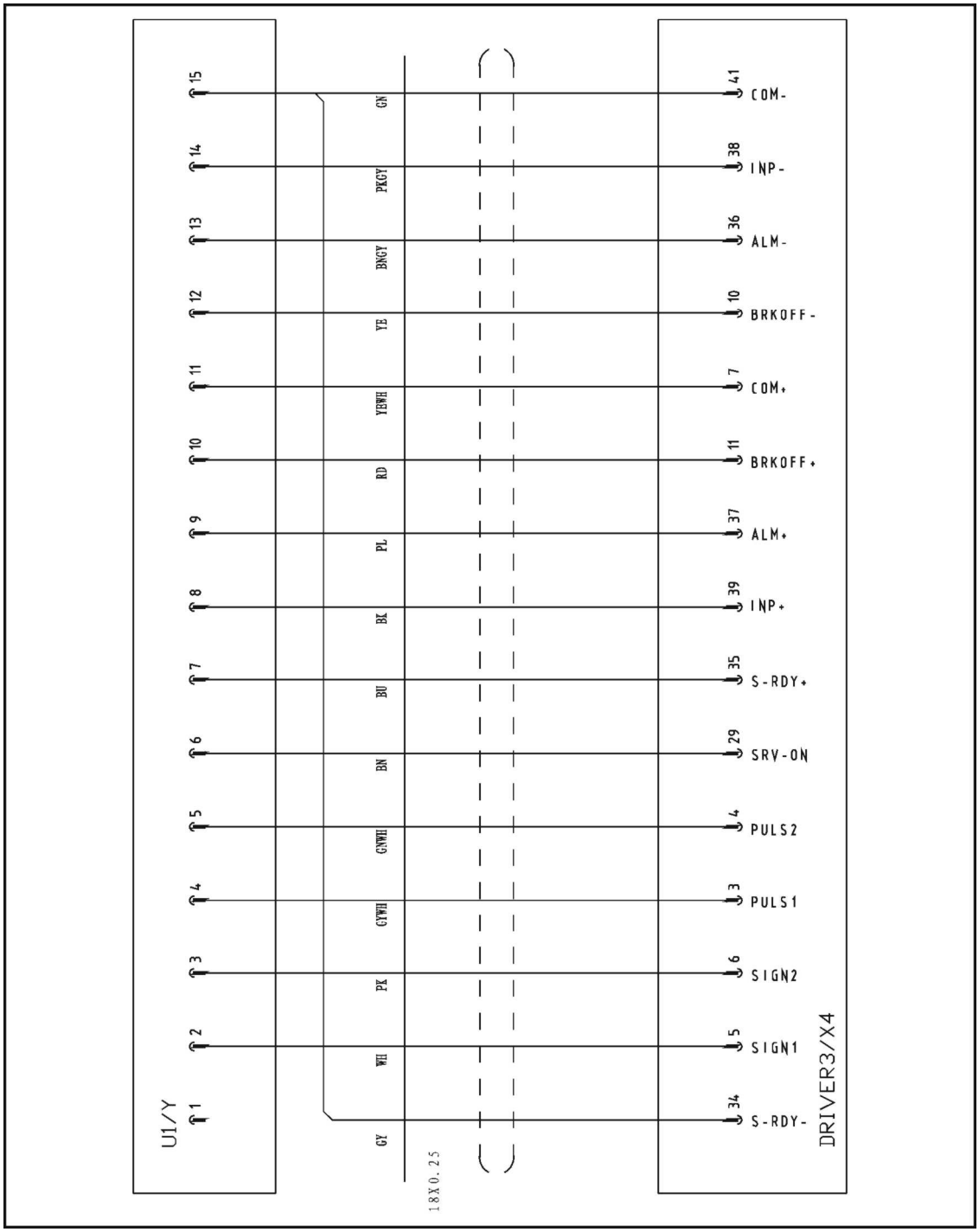

17.12 Y-axis Panasonic Servo Motor Wiring Diagram

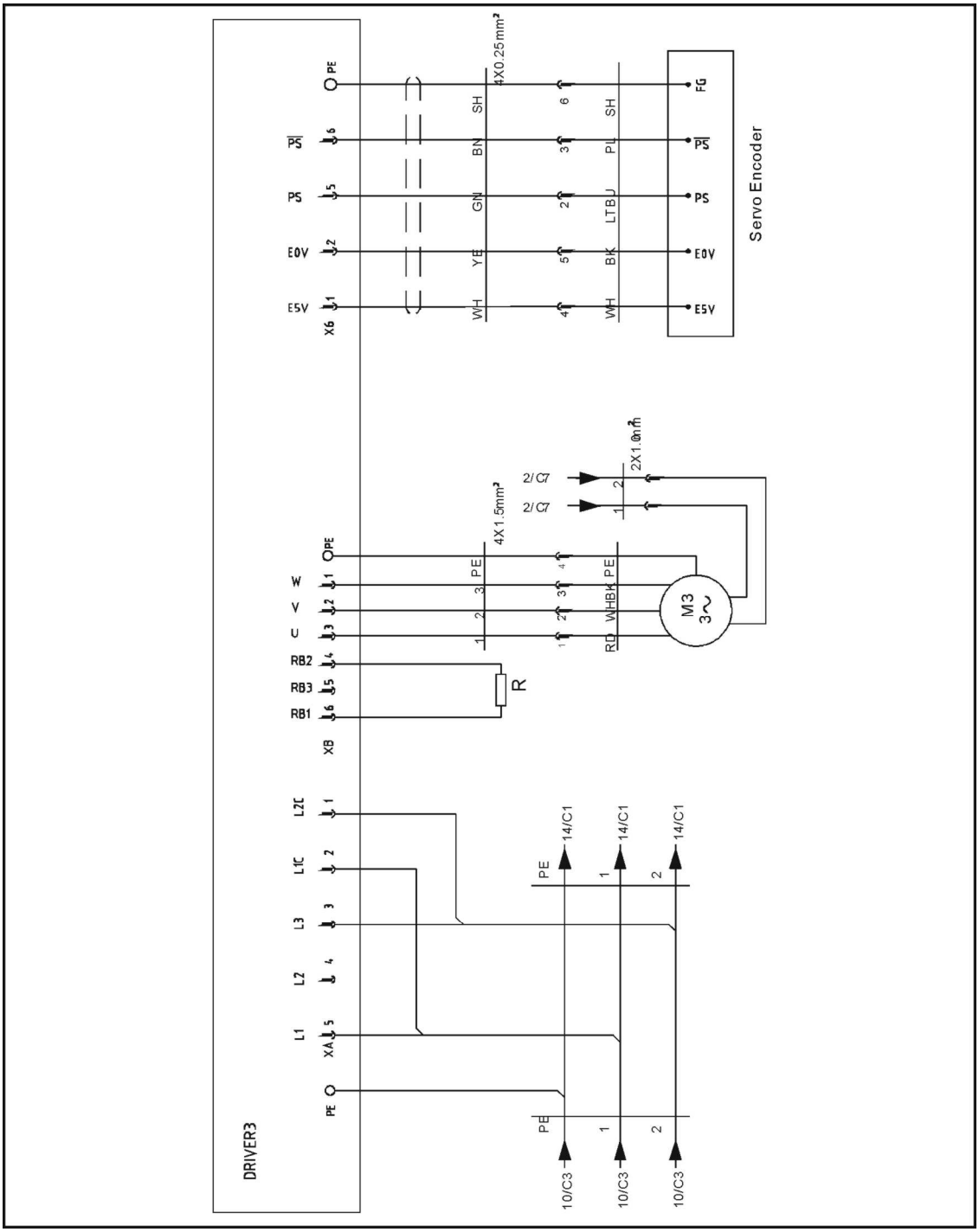

17.13 X2-axis Panasonic Servo Drive I/O Wiring Diagram

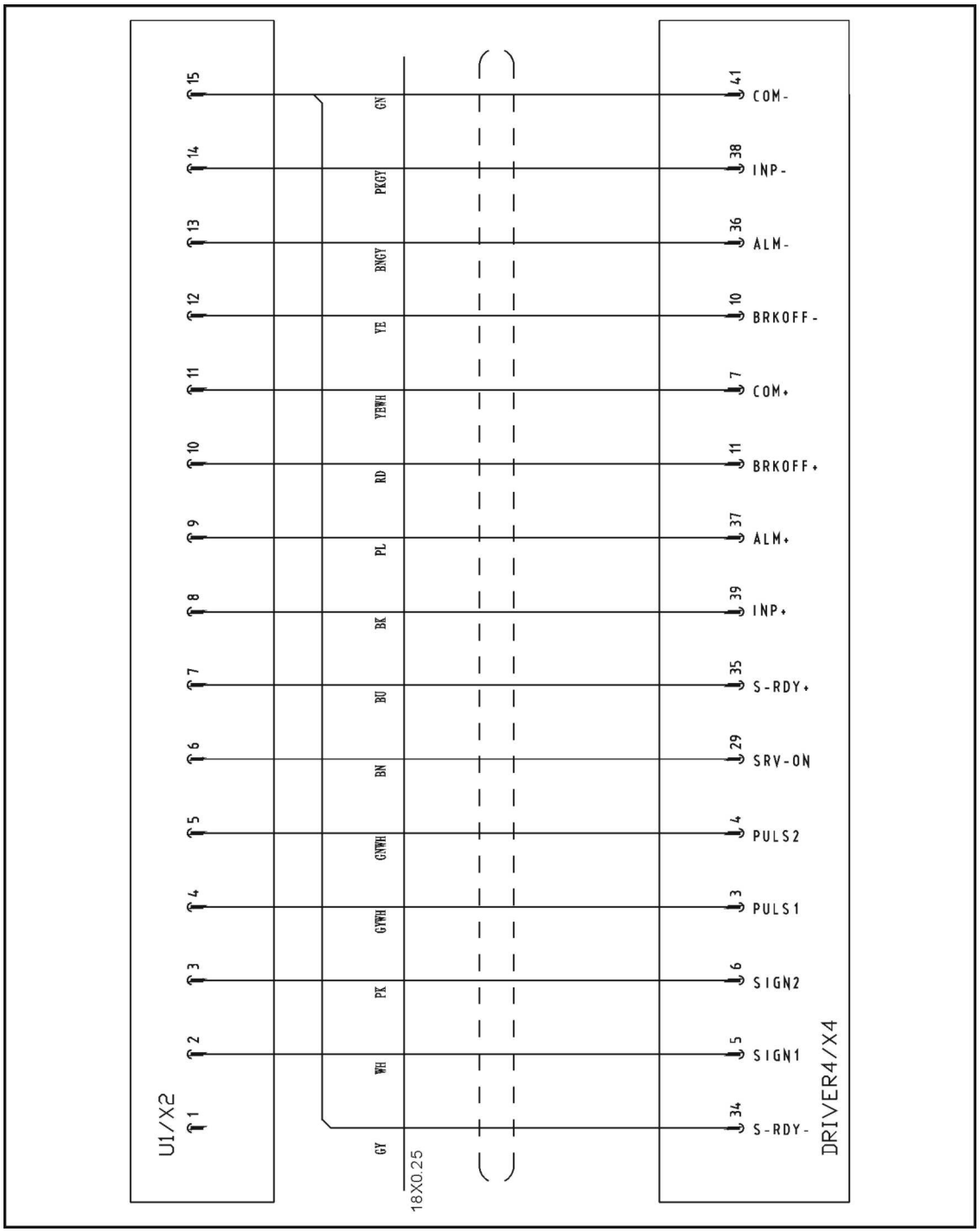

17.14 X2-axis Panasonic Servo Motor Wiring Diagram

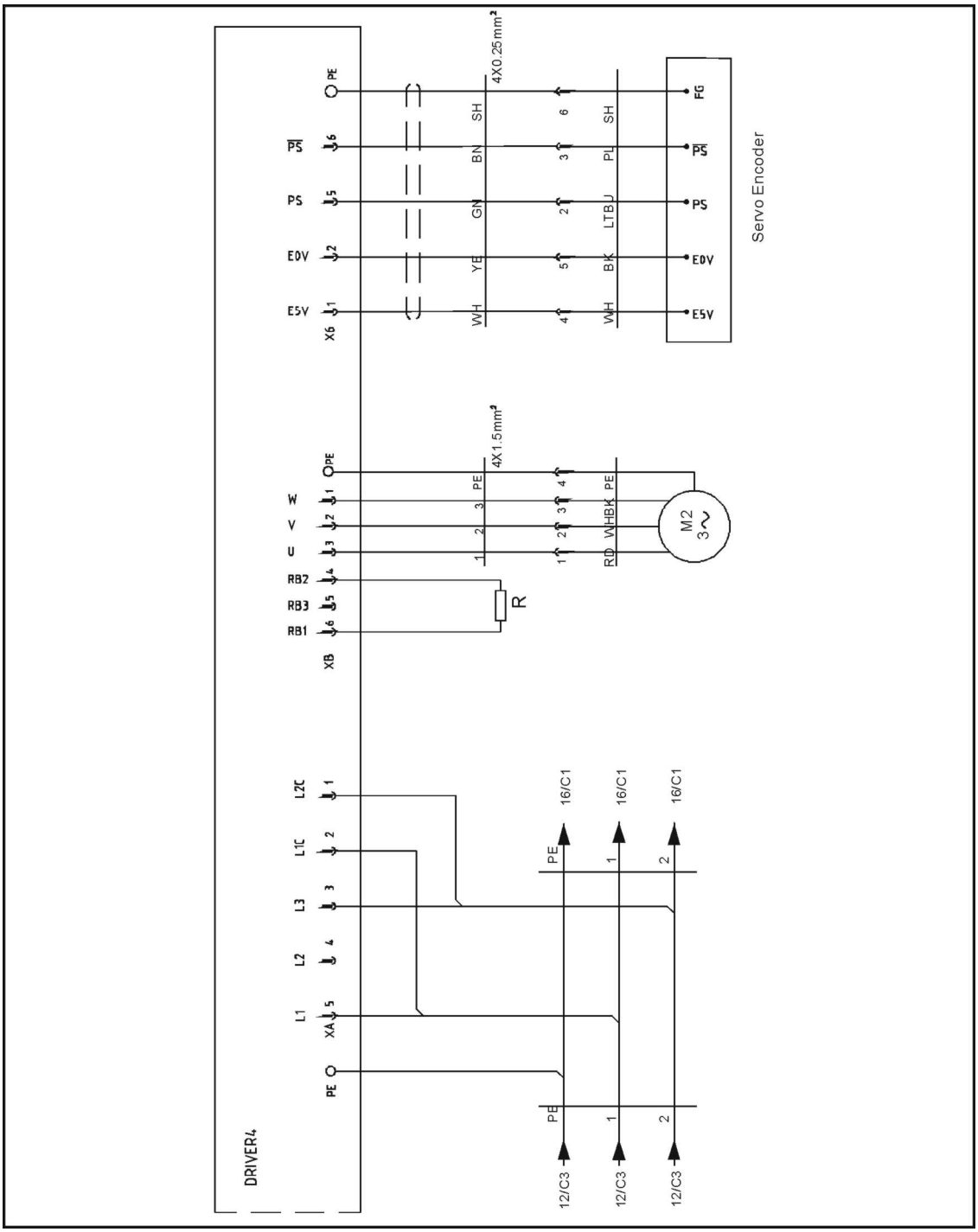

17.15 Y2-axis Panasonic Servo Drive I/O Wiring Diagram

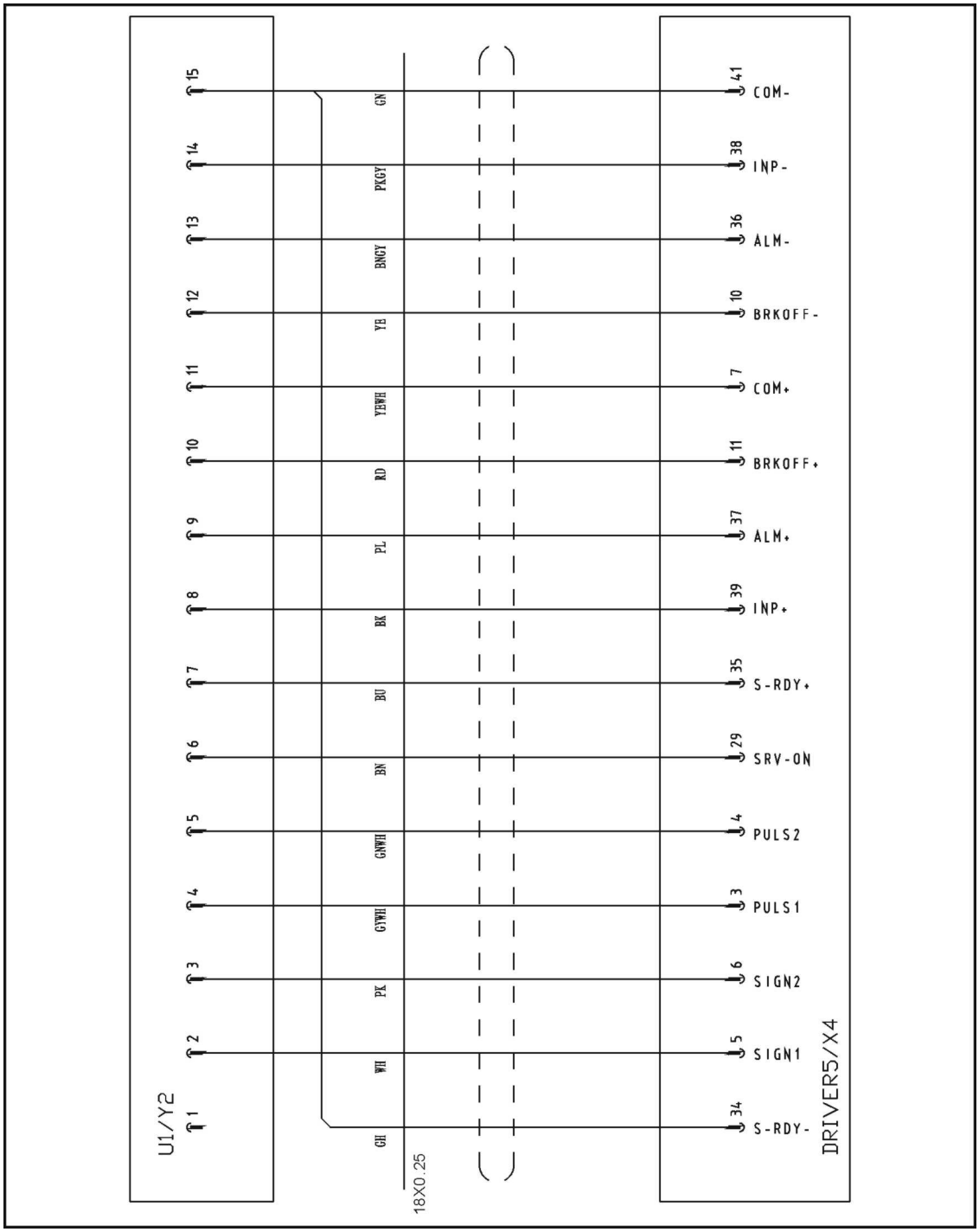

17.16 Y2-axis Panasonic Servo Motor Wiring Diagram

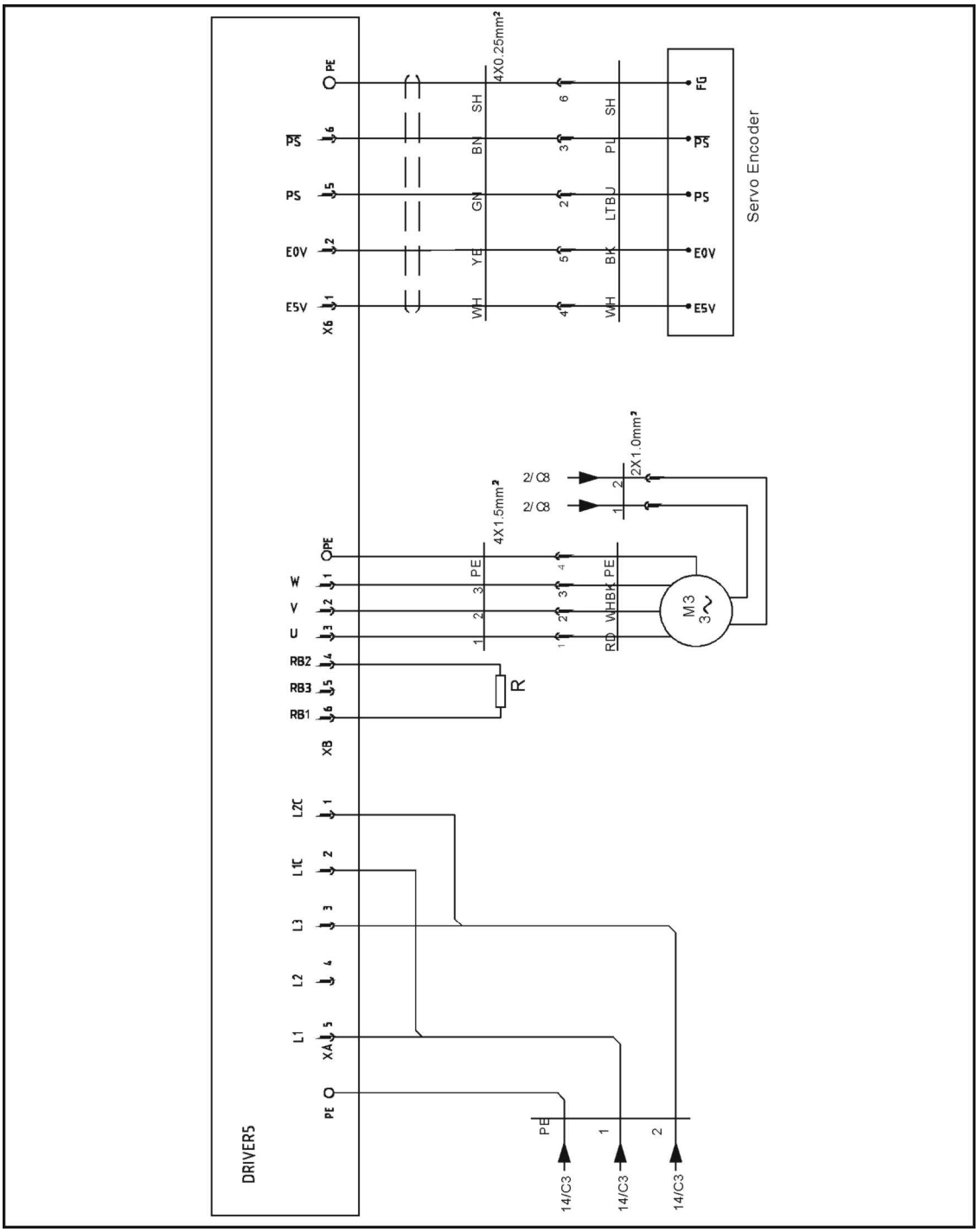

17.17 Z-axis Delta Servo Drive I/O Wiring Diagram

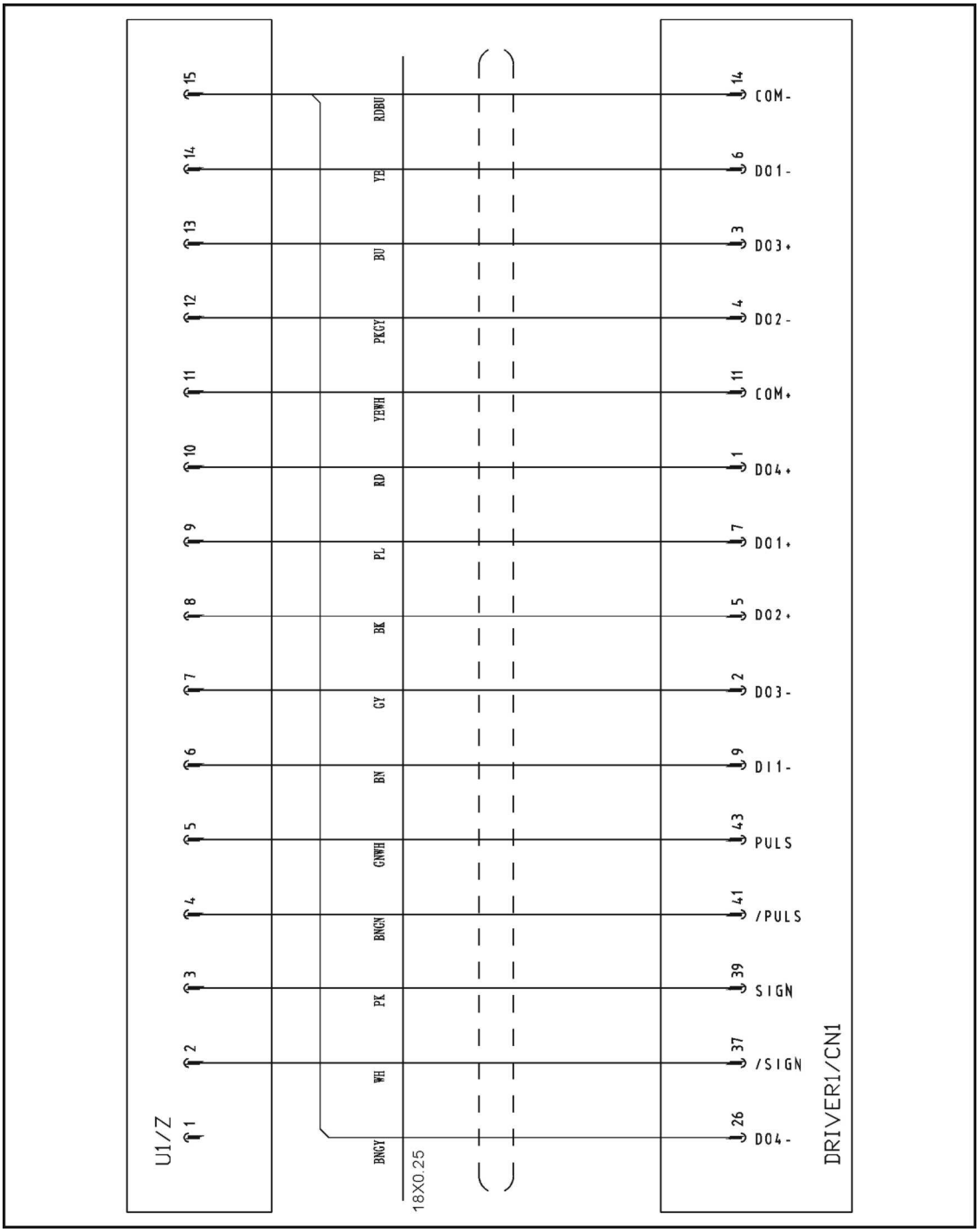

17.18 Z-axis Delta Servo Motor Wiring Diagram

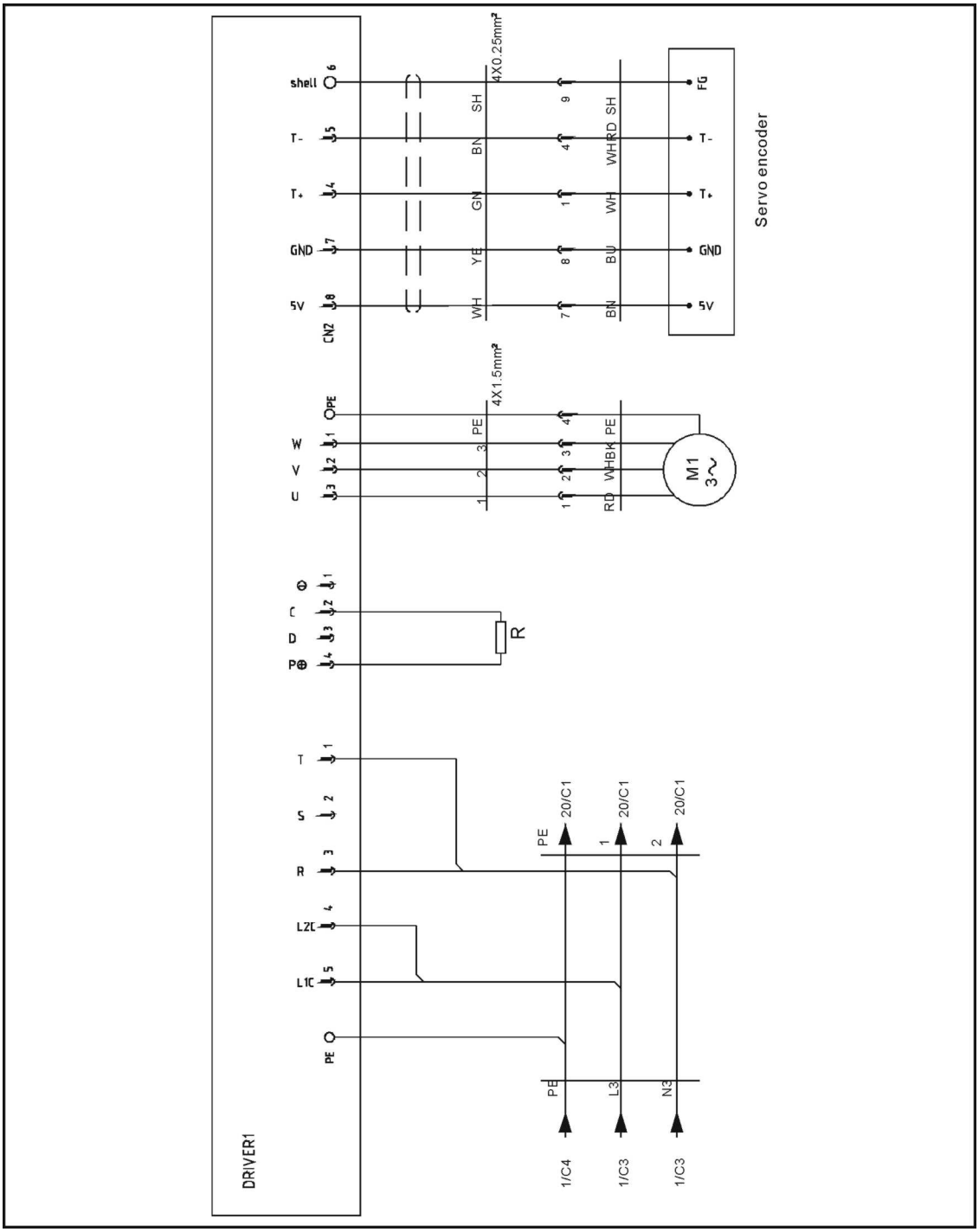

17.19 X-axis Delta Servo Drive I/O Wiring Diagram

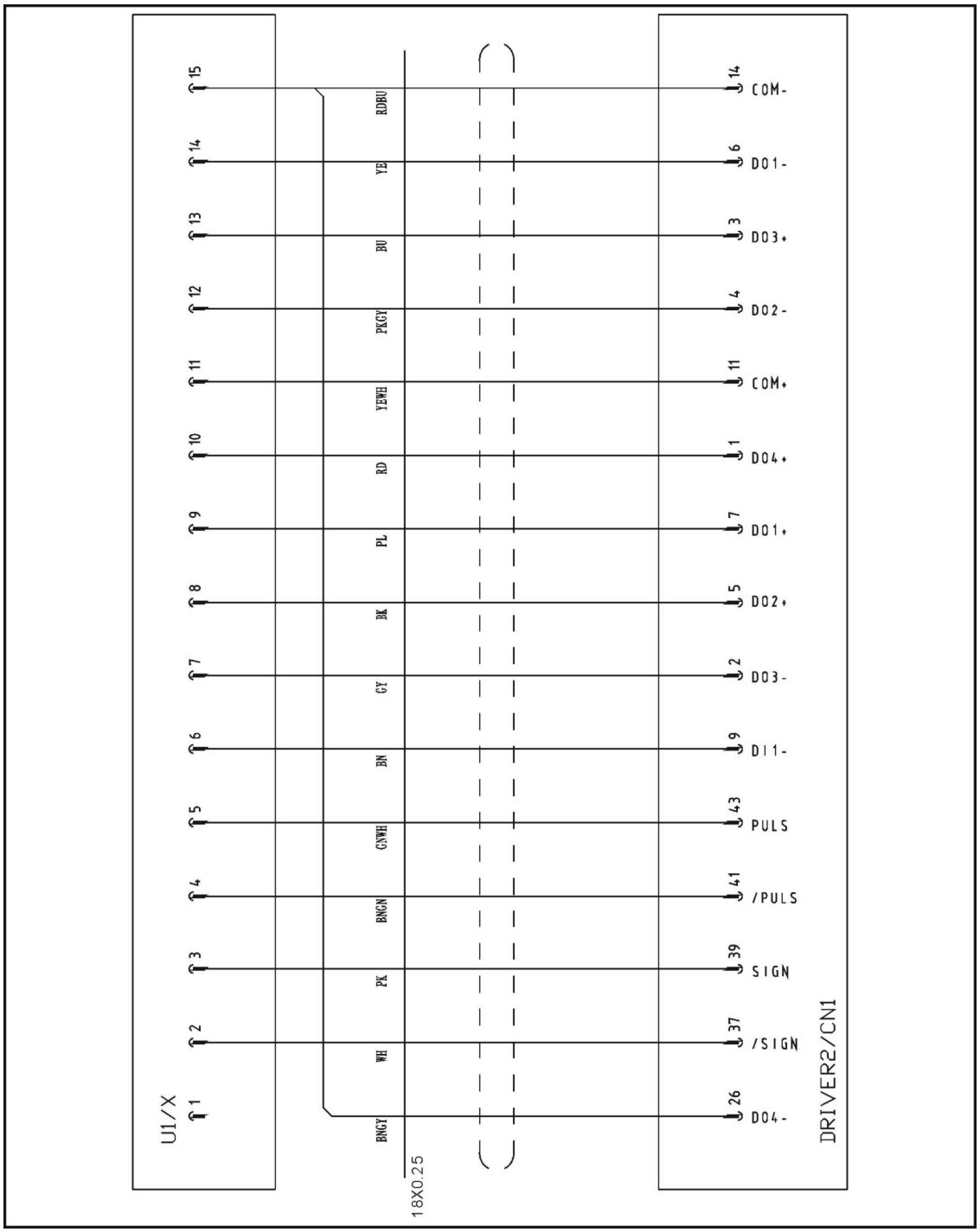

17.20 X-axis Delta Servo Motor Wiring Diagram

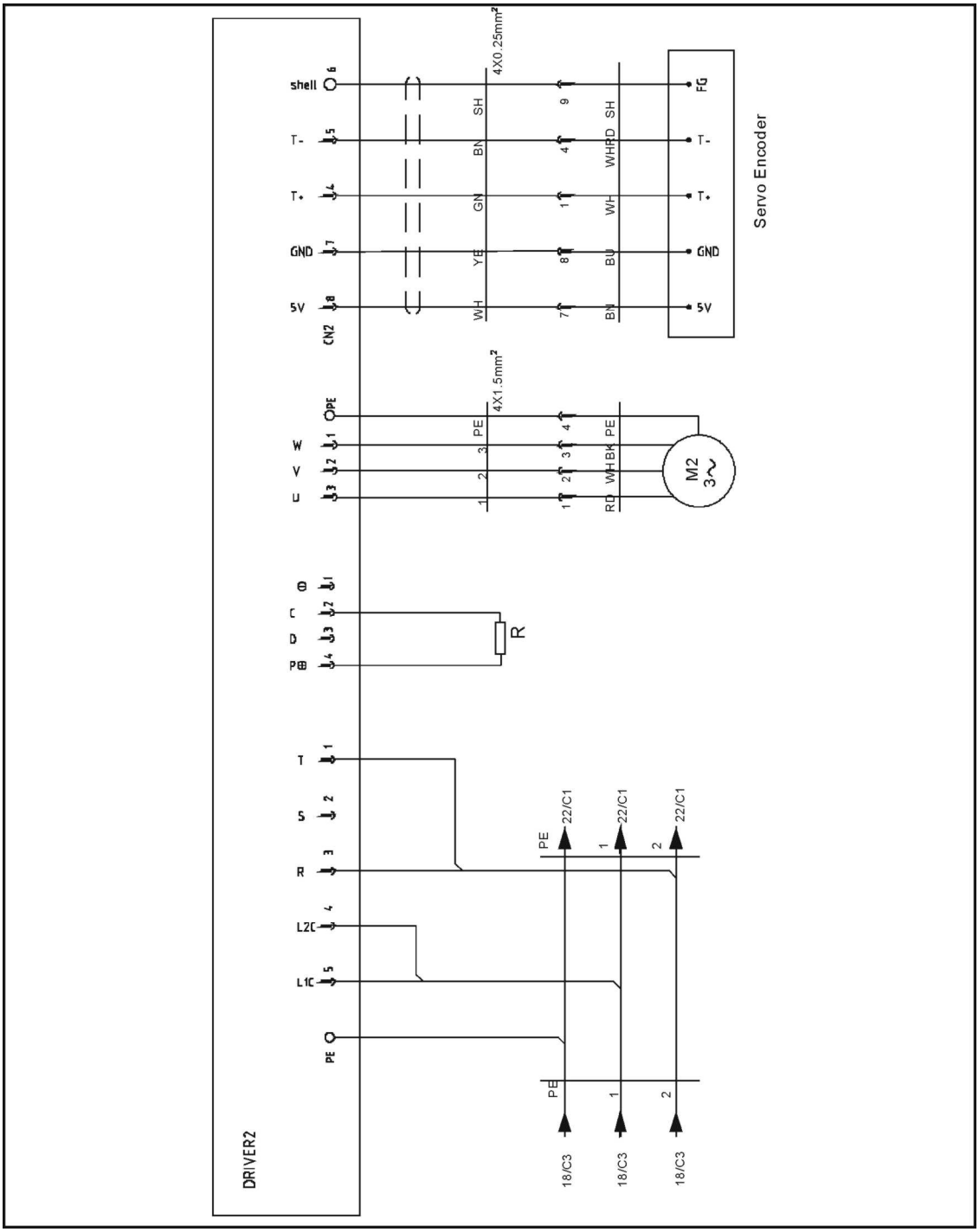

17.21 Y-axis Delta Servo Drive I/O Wiring Diagram

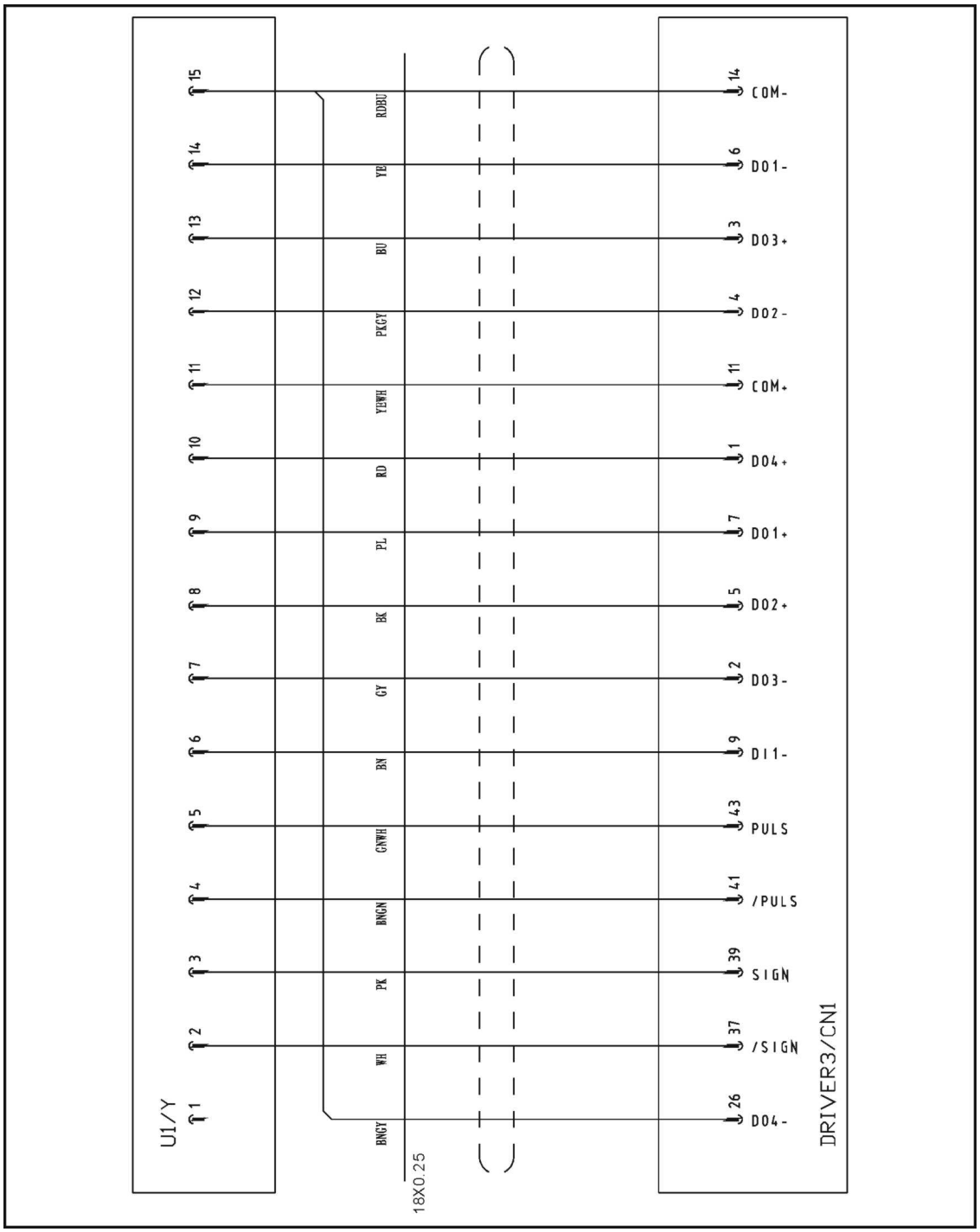

17.22 Y-axis Delta Servo Motor Wiring Diagram

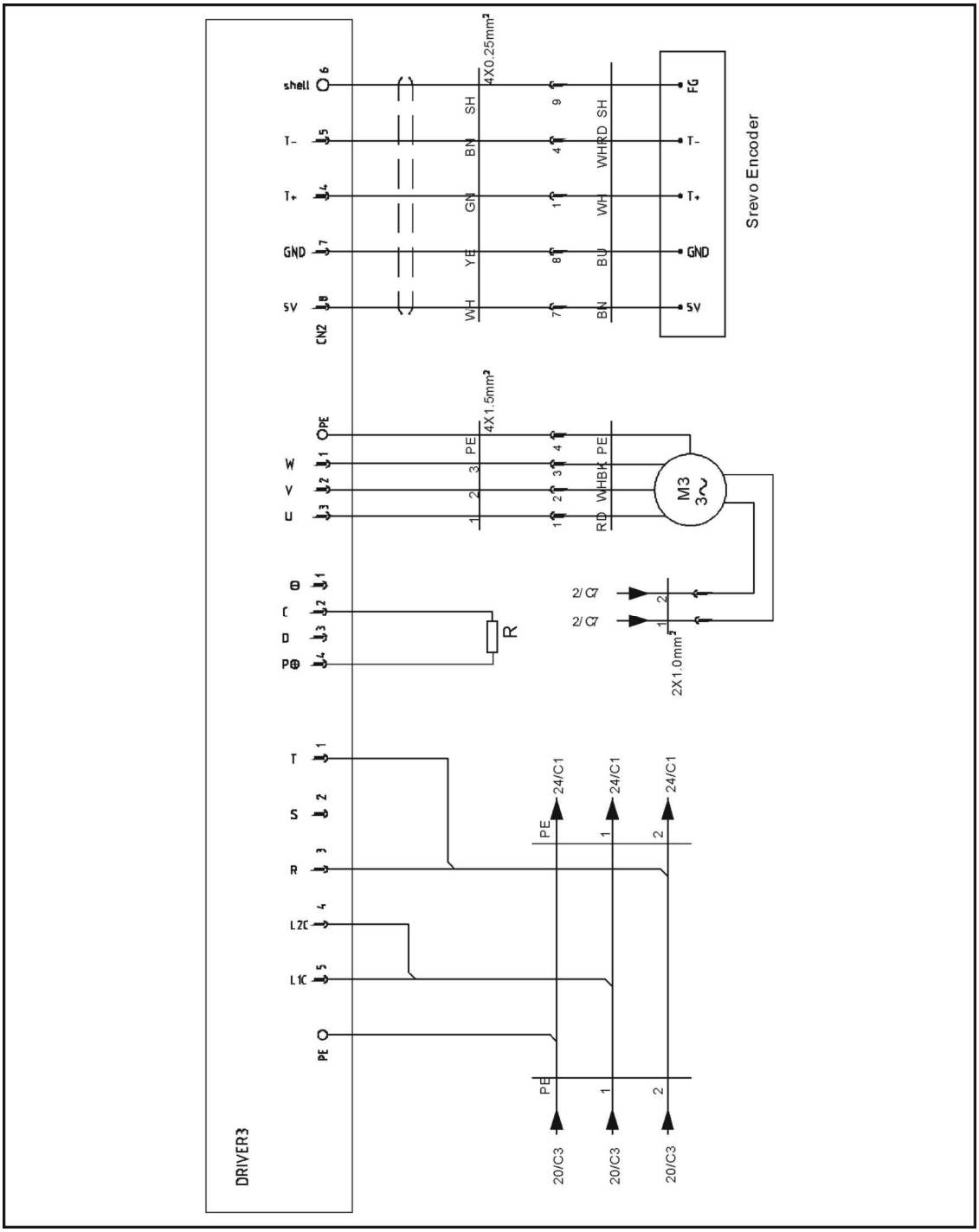

17.23 X2-axis Delta Servo Drive I/O Wiring Diagram

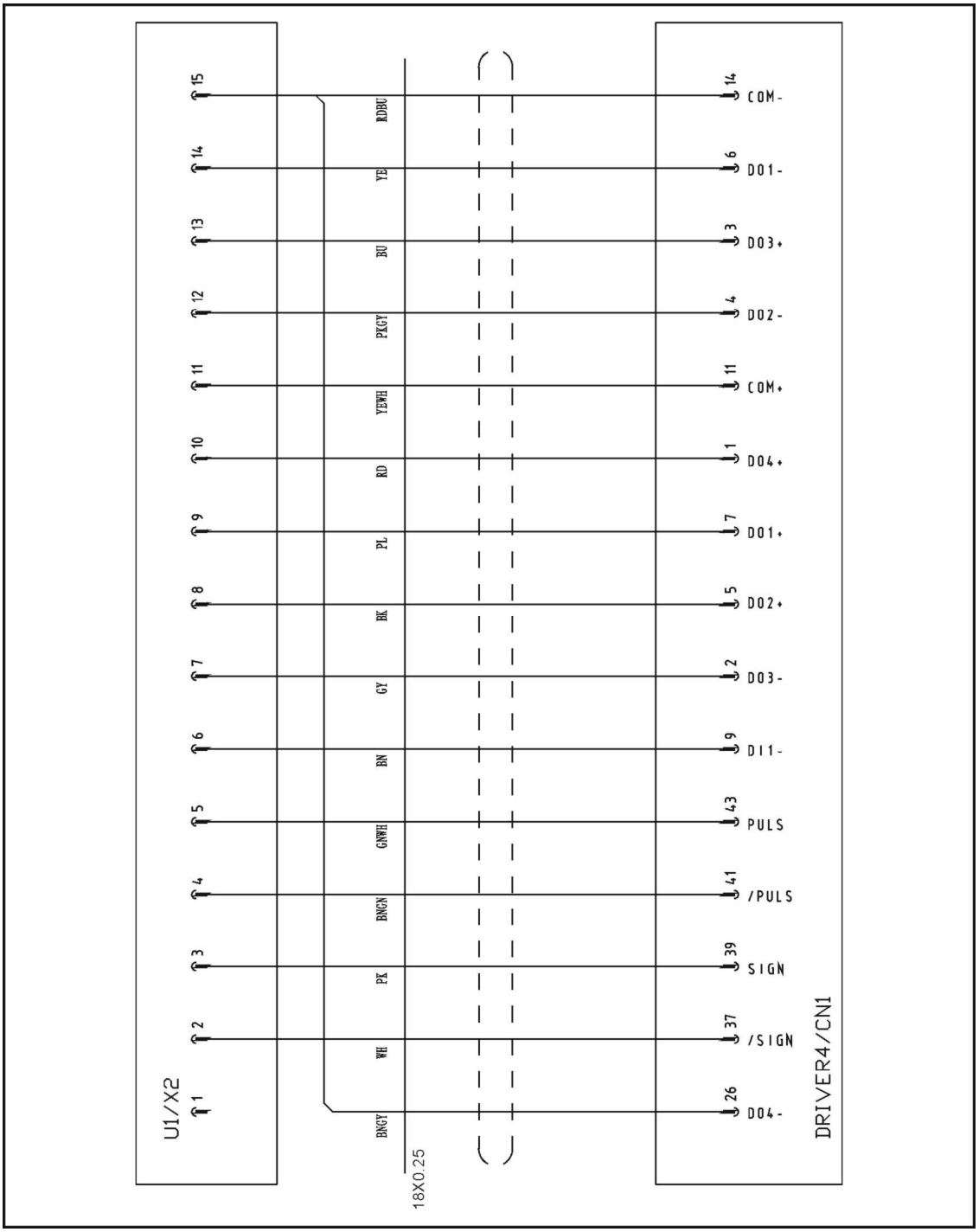

17.24 X2-axis Delta Servo Motor Wiring Diagram

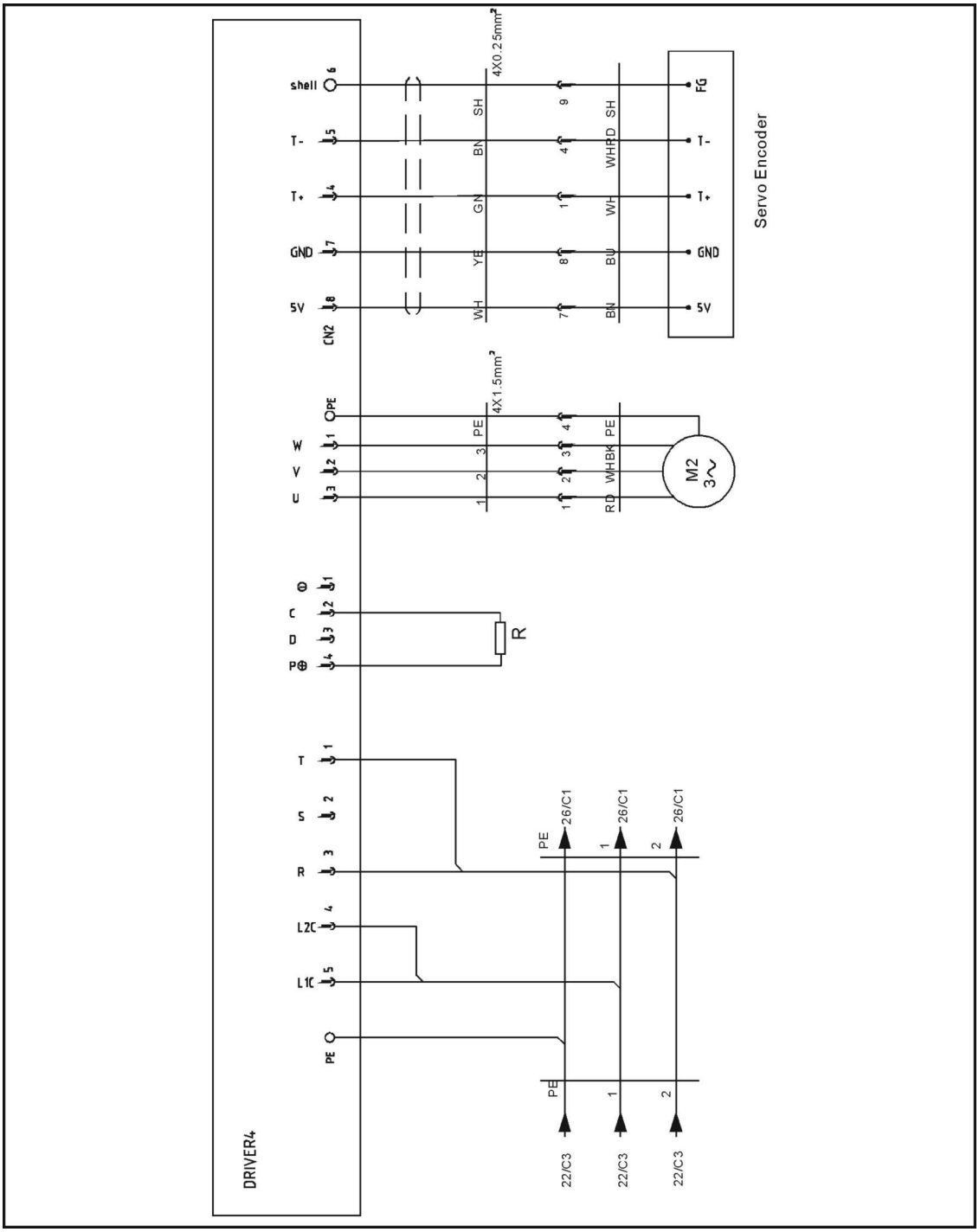

17.25 Y2-axis Delta Servo Drive I/O Wiring Diagram

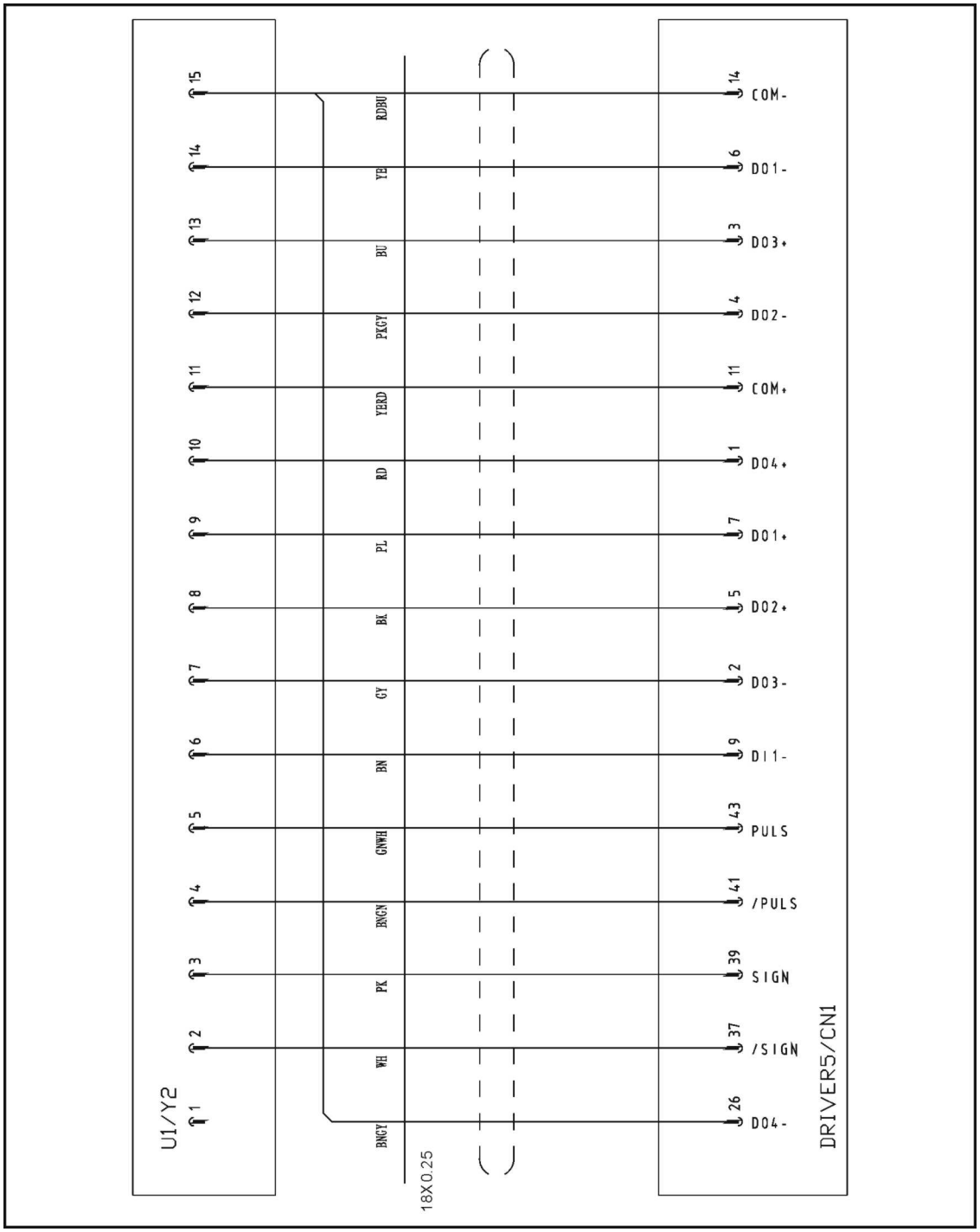

17.26 Y2-axis Delta Servo Motor Wiring Diagram

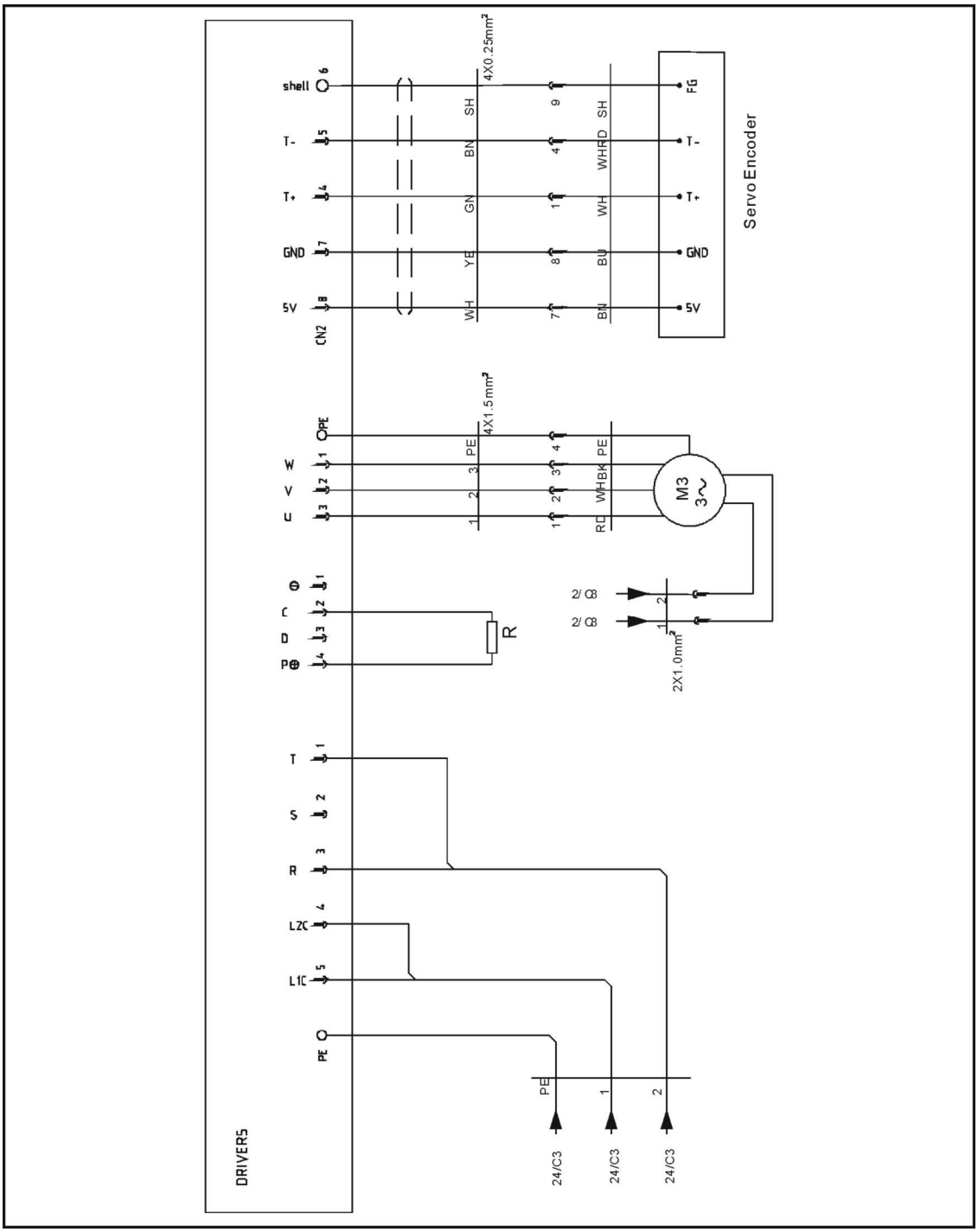

17.27 Z-axis Cuinsico Servo Drive I/O Wiring Diagram

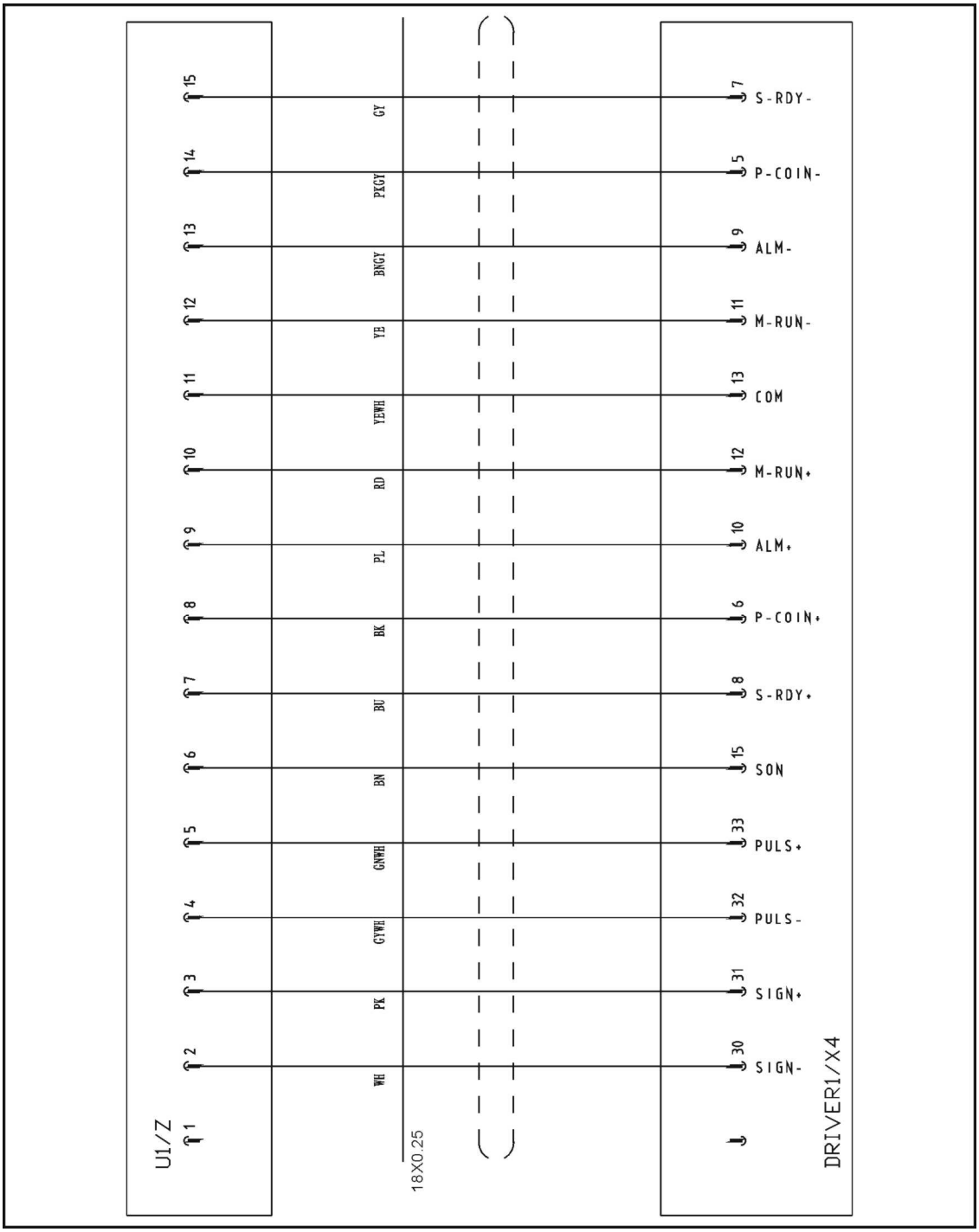

17.28 Z-axis Cuinsico Servo Motor Wiring Diagram

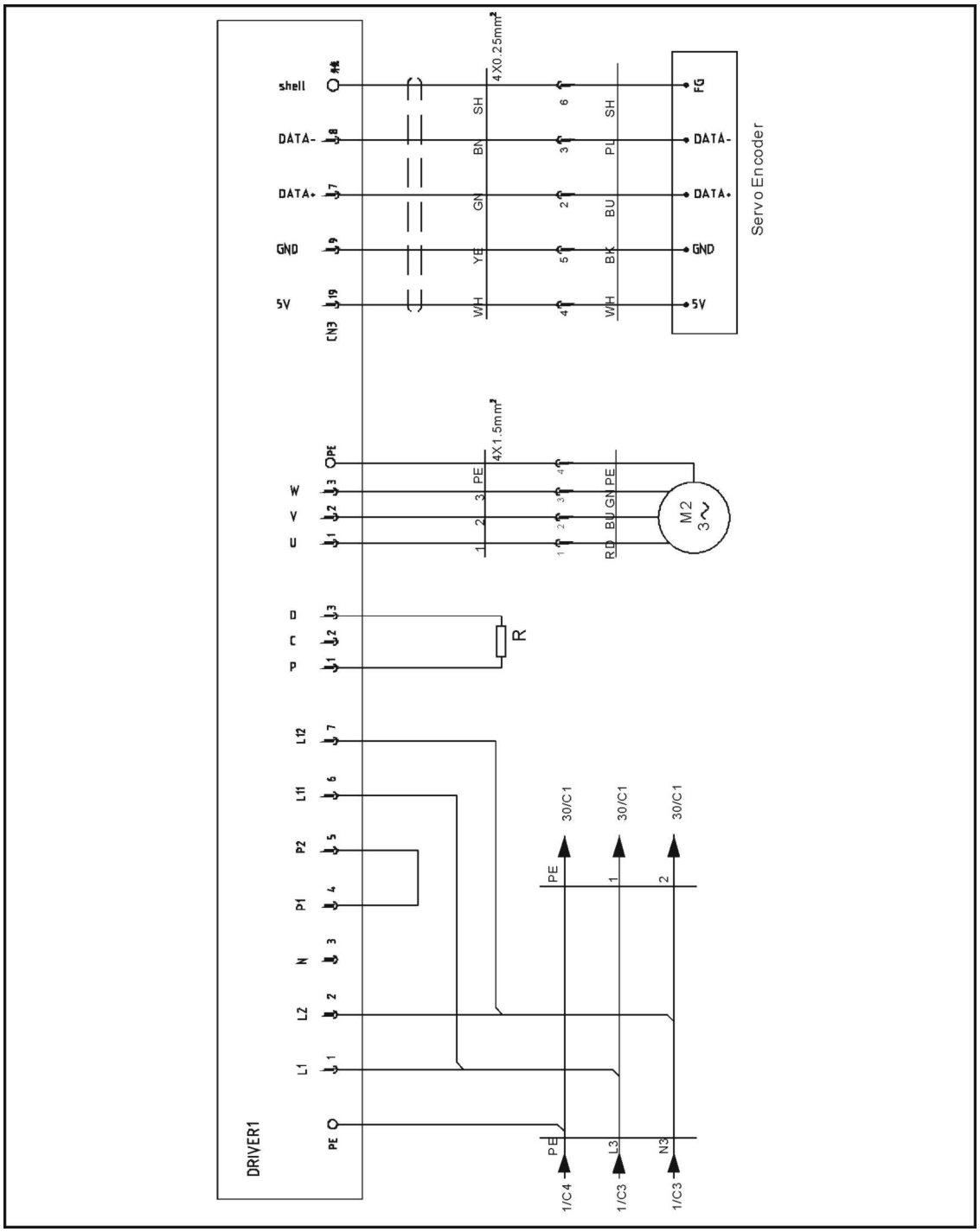

17.29 X-axis Cuinsico Servo Drive I/O Wiring Diagram

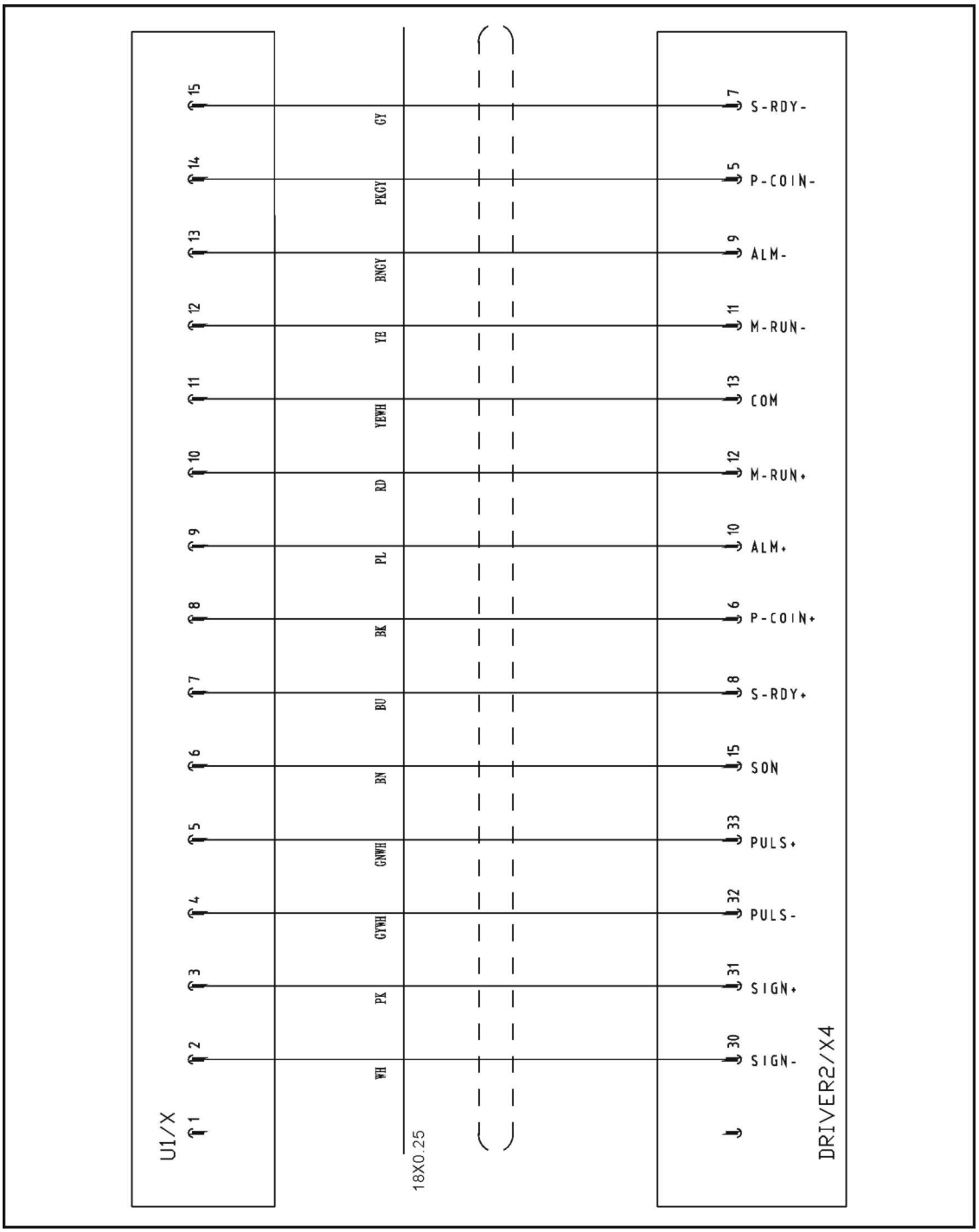

17.30 X-axis Cuinsico Servo Motor Wiring Diagram

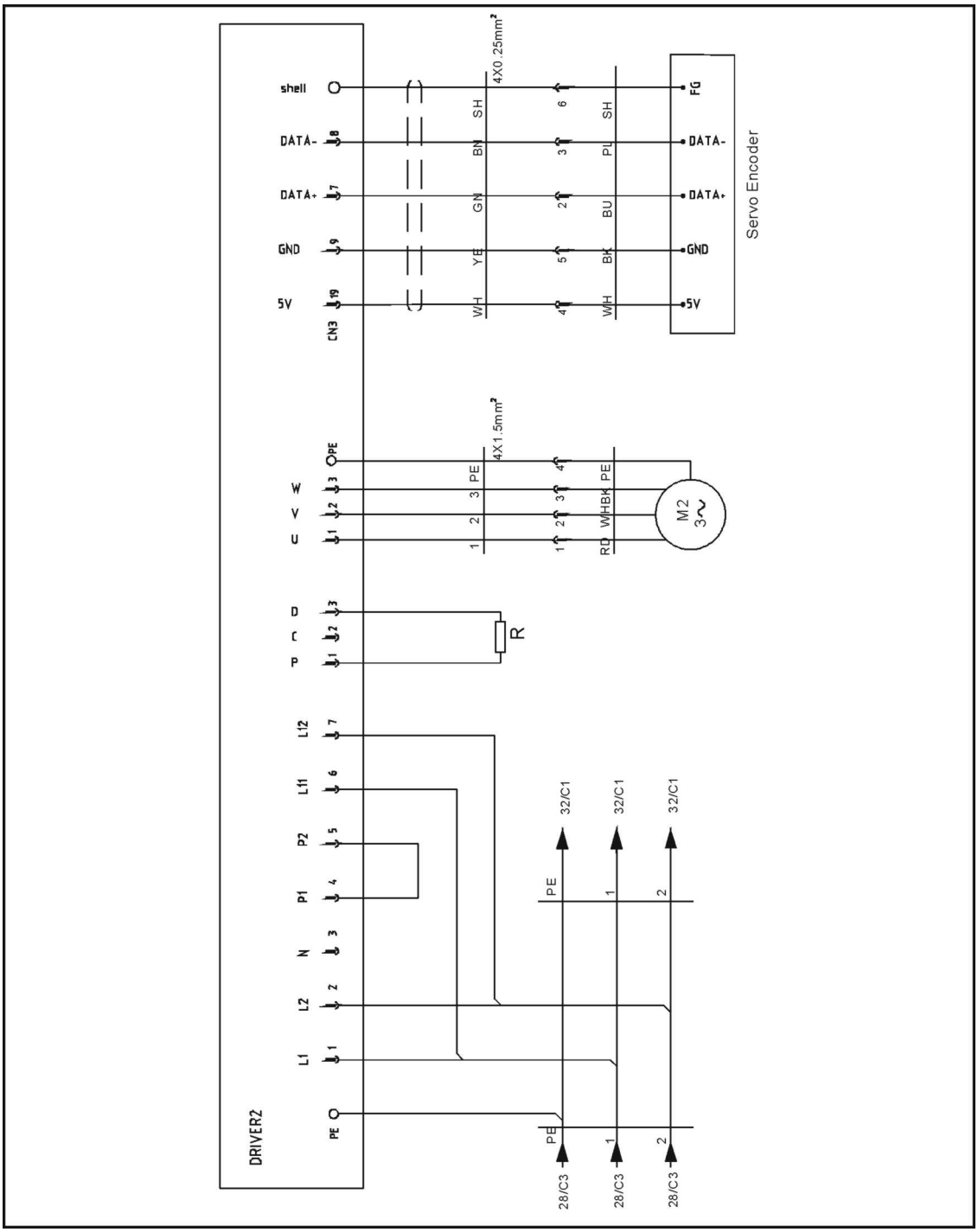

17.31 Y-axis Cuinsico Servo Drive I/O Wiring Diagram

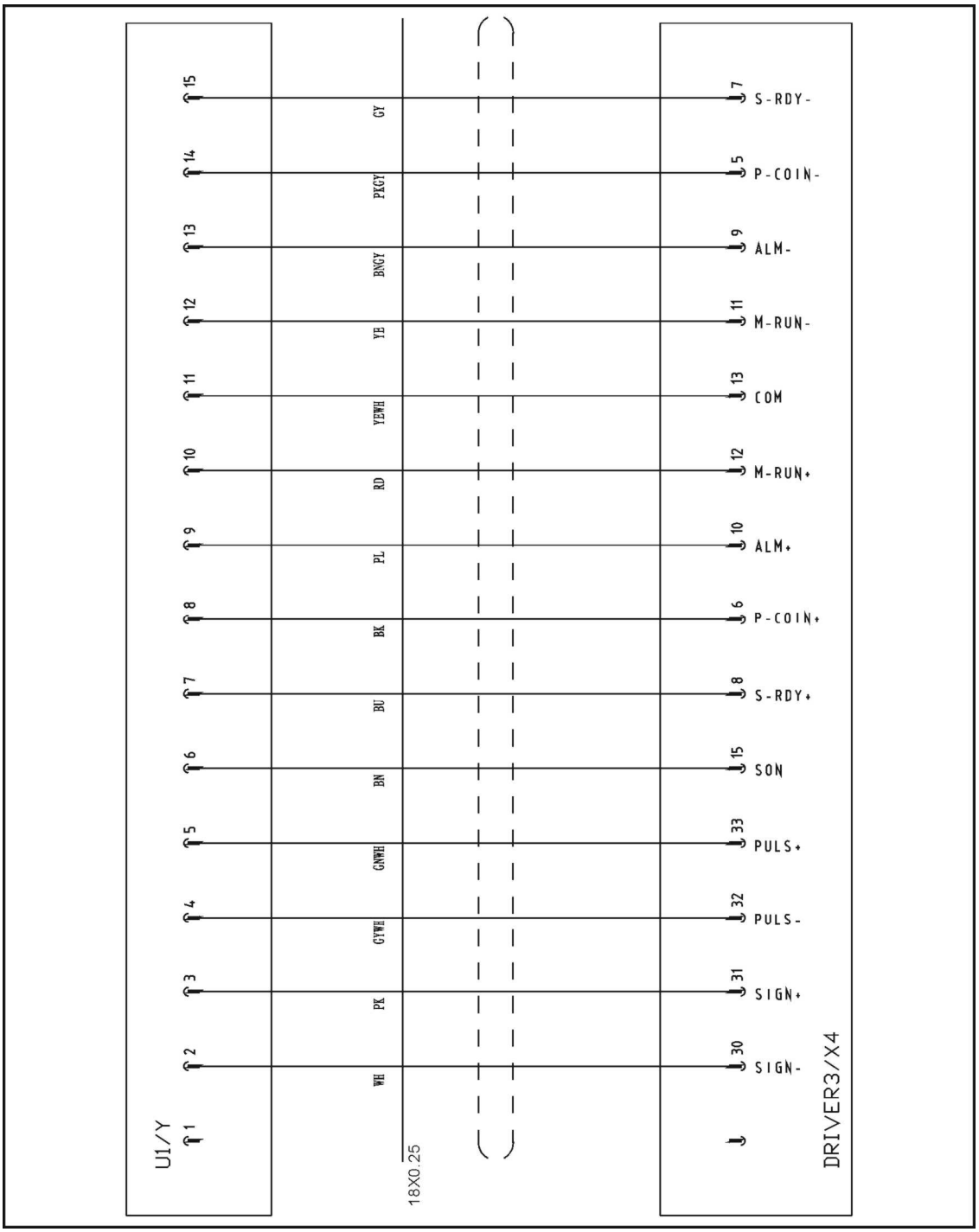

17.32 Y-axis Cuinsico Servo Motor Wiring Diagram

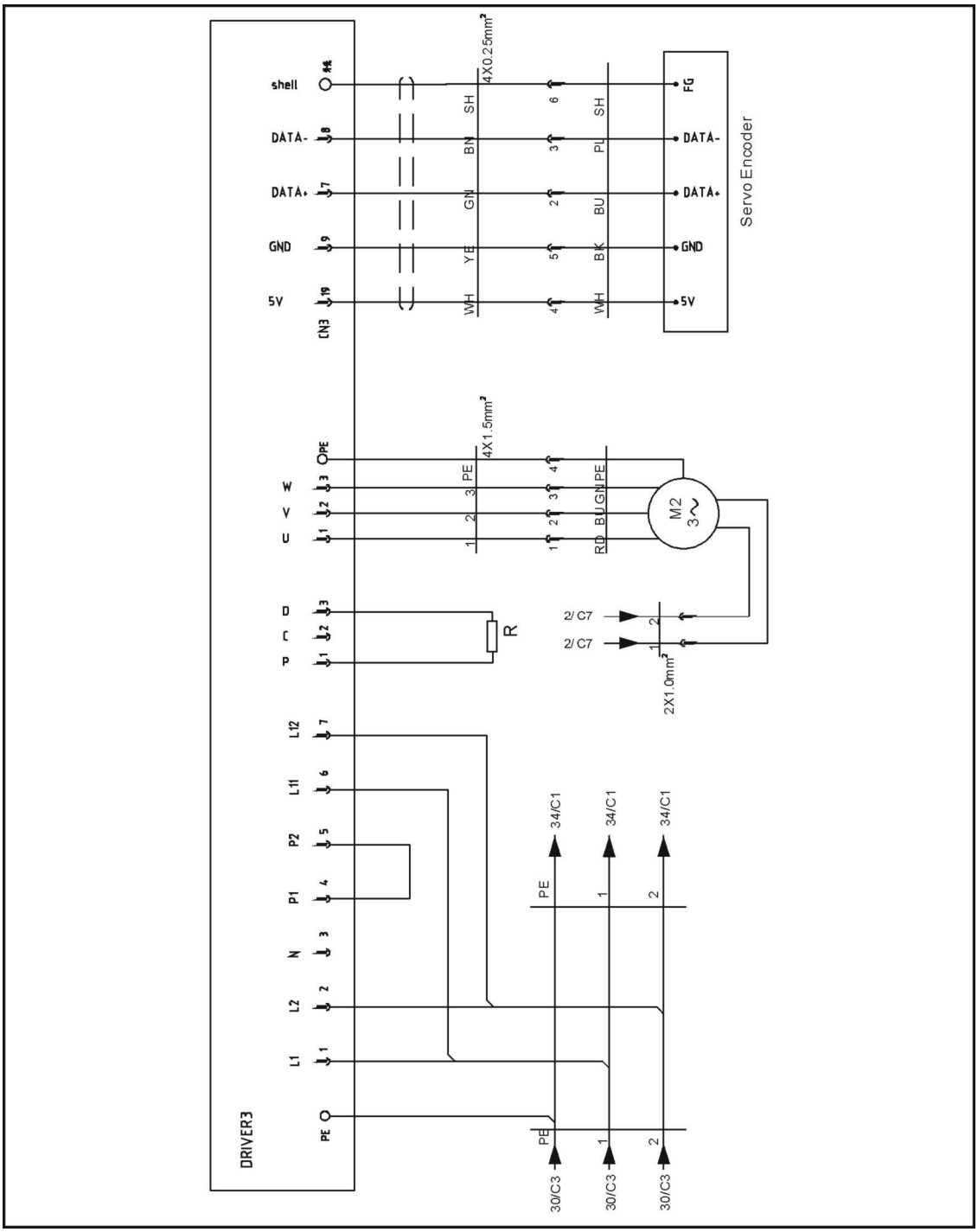

17.33 X2-axis Cuinsico Servo Drive I/O Wiring Diagram

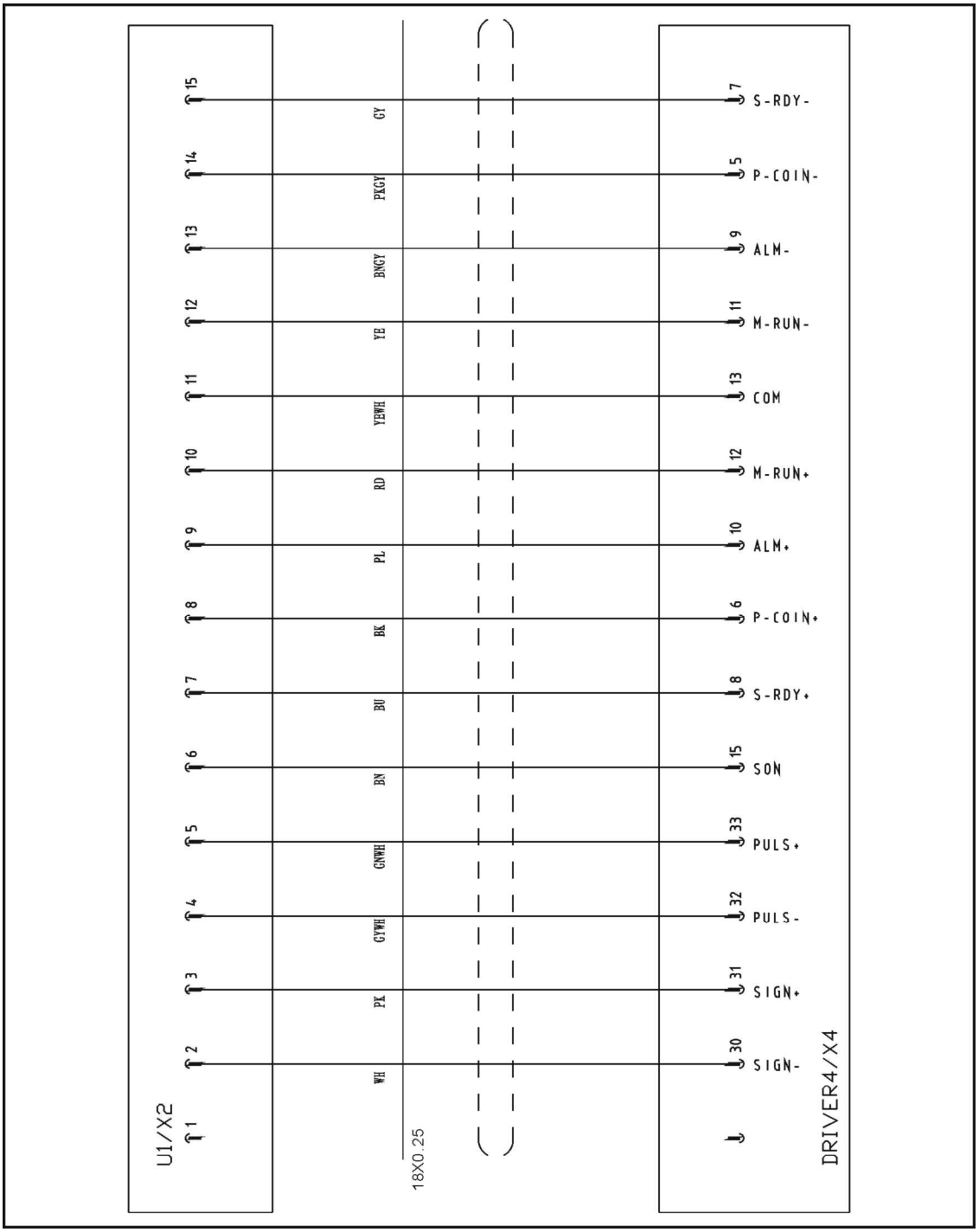

17.34 X2-axis Cuinsico Servo Motor Wiring Diagram

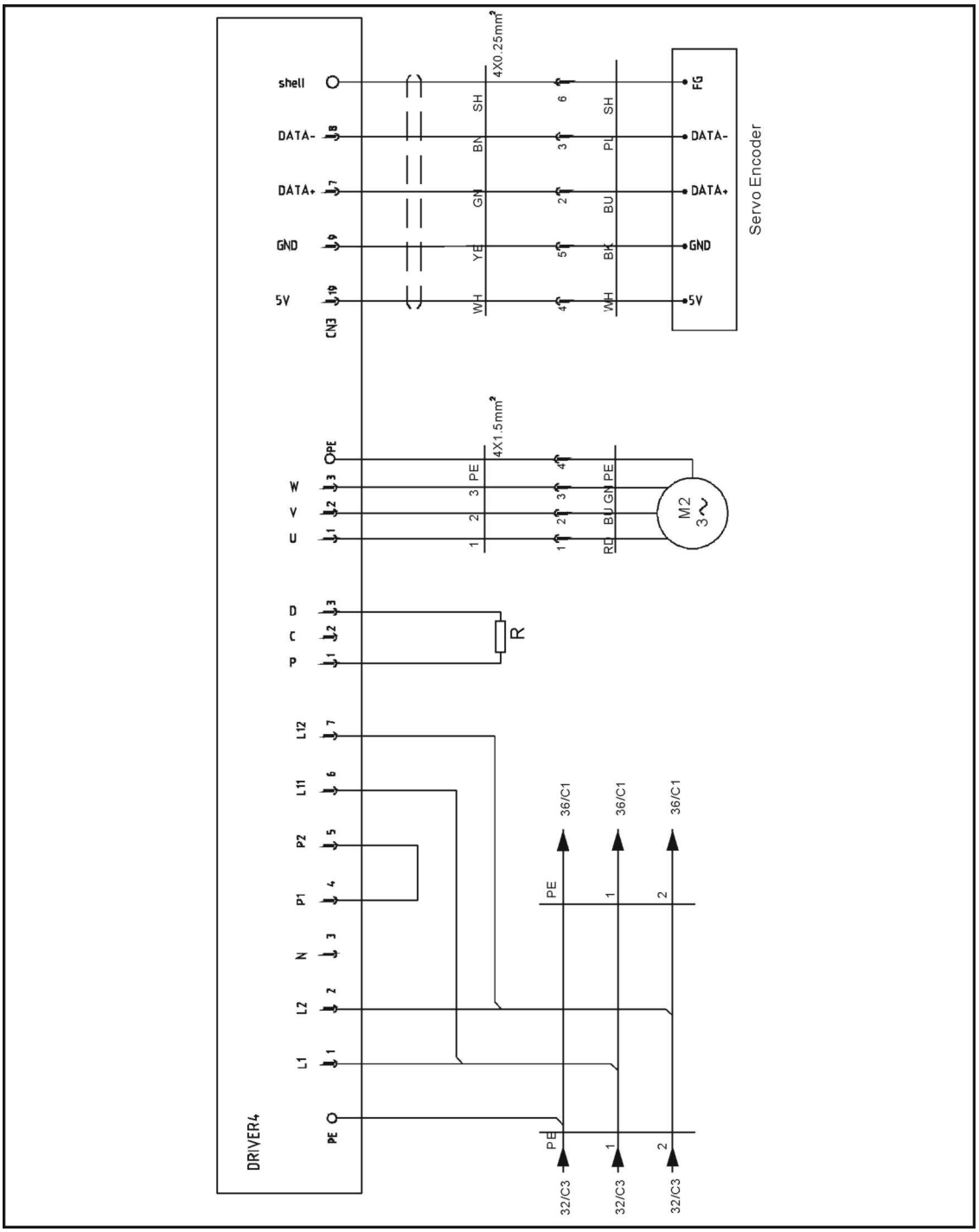

17.35 Y2-axis Cuinsico Servo Drive I/O Wiring Diagram

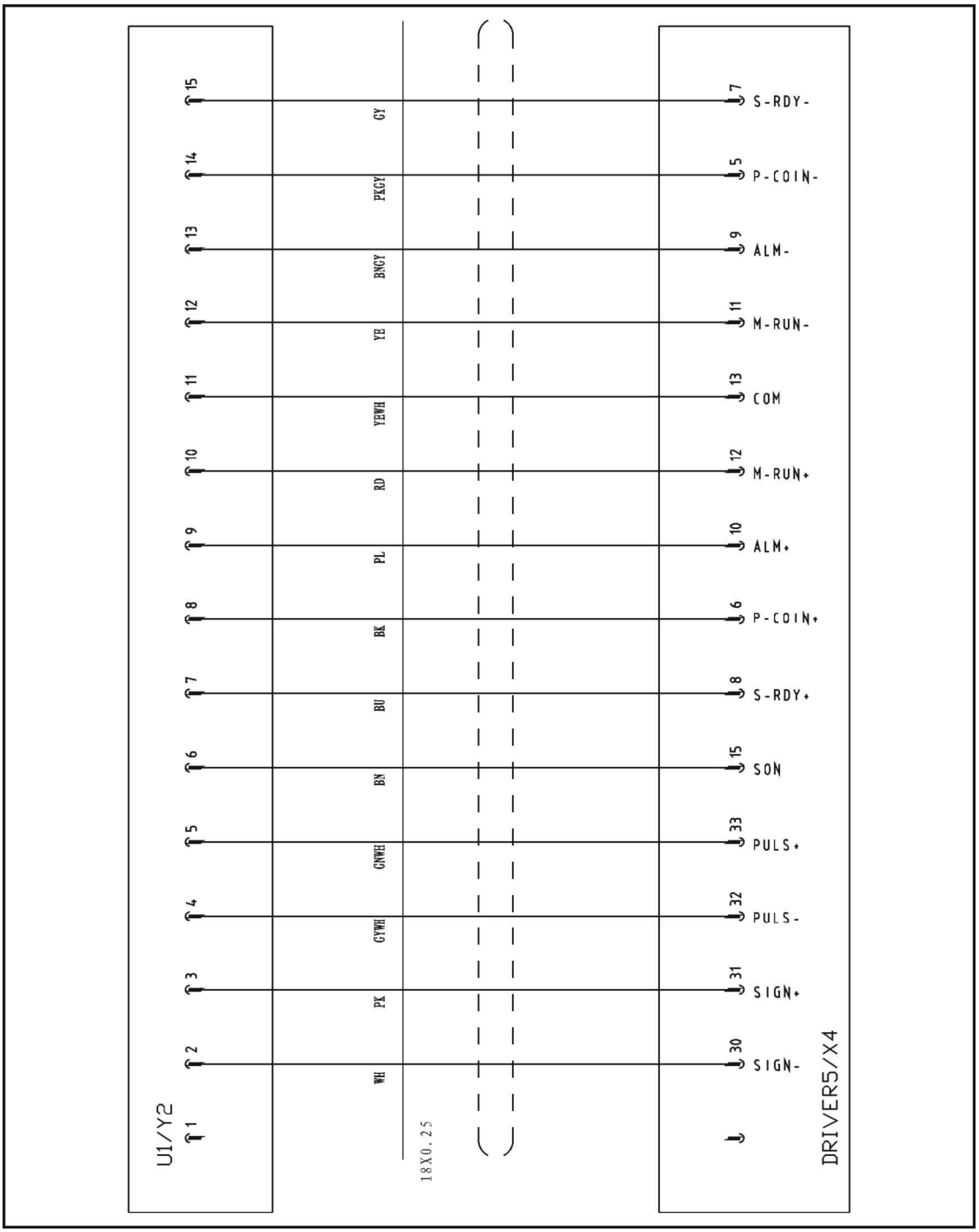

17.36 Y2-axis Cuinsico Servo Motor Wiring Diagram

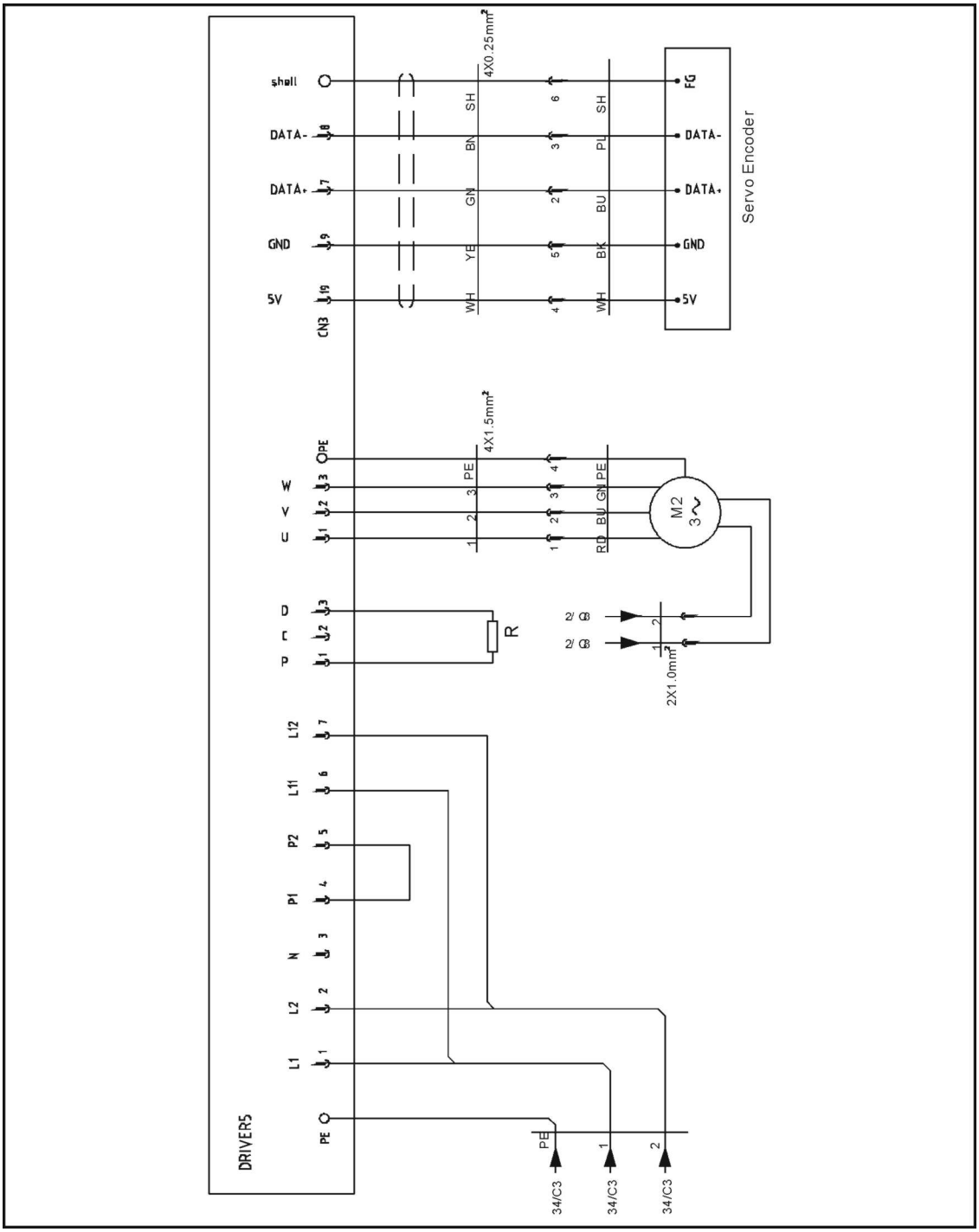

17.37 EM12/EM67 Signal Input Wiring Diagram

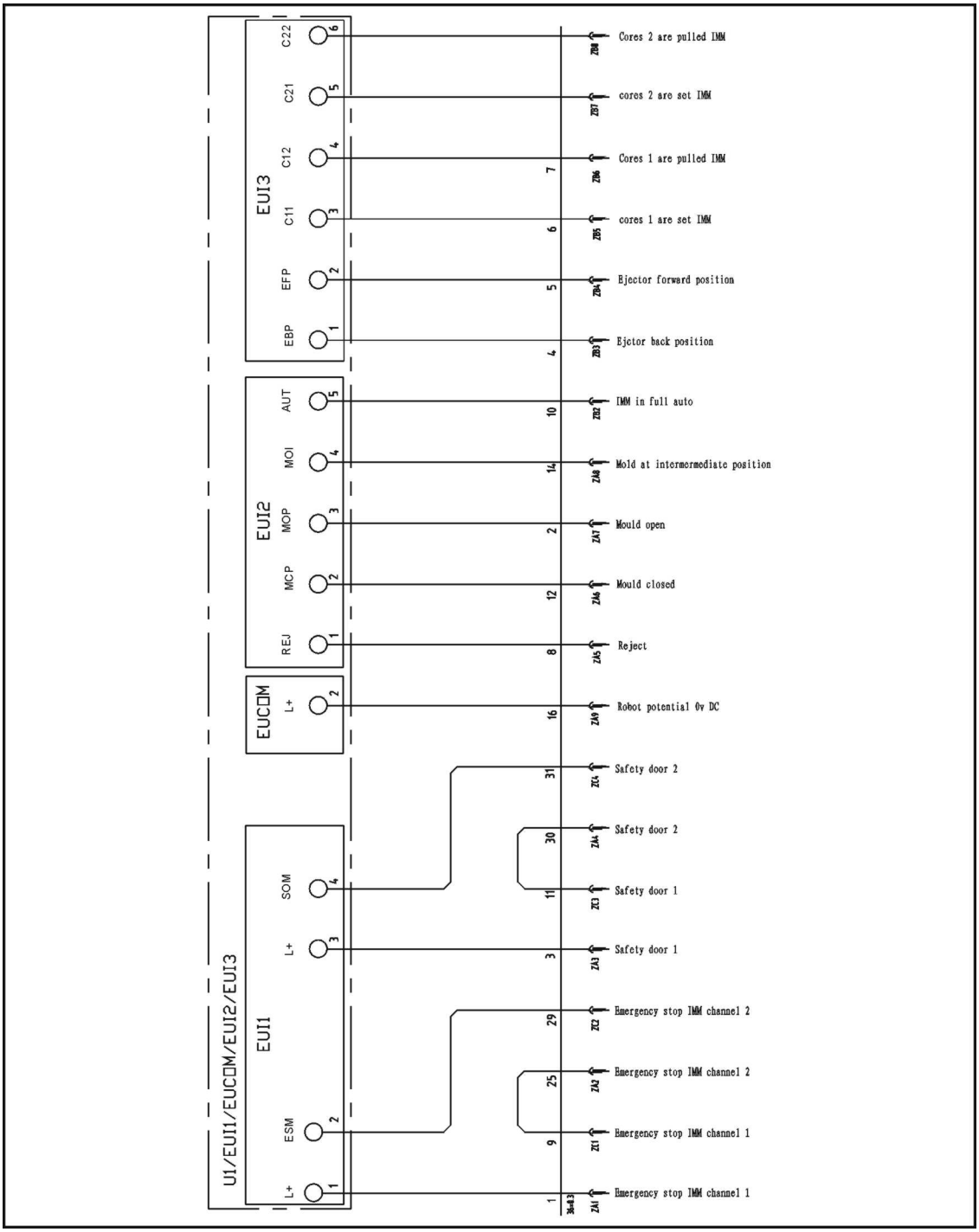

17.38 EM12/EM67 Signal Output Wiring Diagram