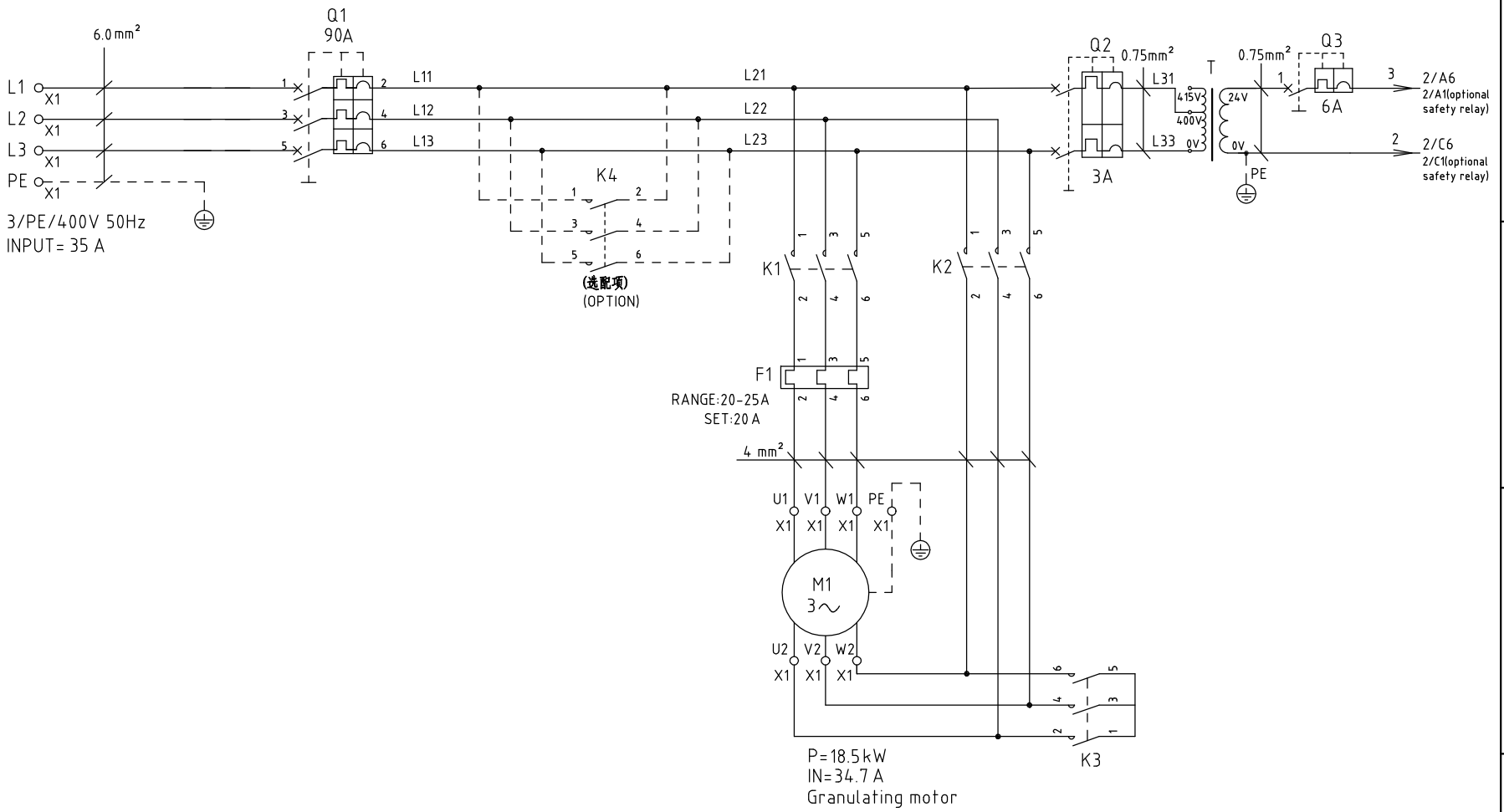

Ver.B									Title SG-3650E Main Circuit Diagram	Drawing NO. SG-3650E-CE-400V-0-1	Scale		Page 1
					Drawer		Version	0			Standard	CE	Totally 6 Pages
					Designer		Approved by						
					Proofread by				SHINI 信易電熱機械股份有限公司 Shini Plastics Technologies, Inc.		Voltage	400V	
Mark	Before modification	After modification	Modified by	Modify date	Checked by		Date	20200810			Frequency	50Hz	

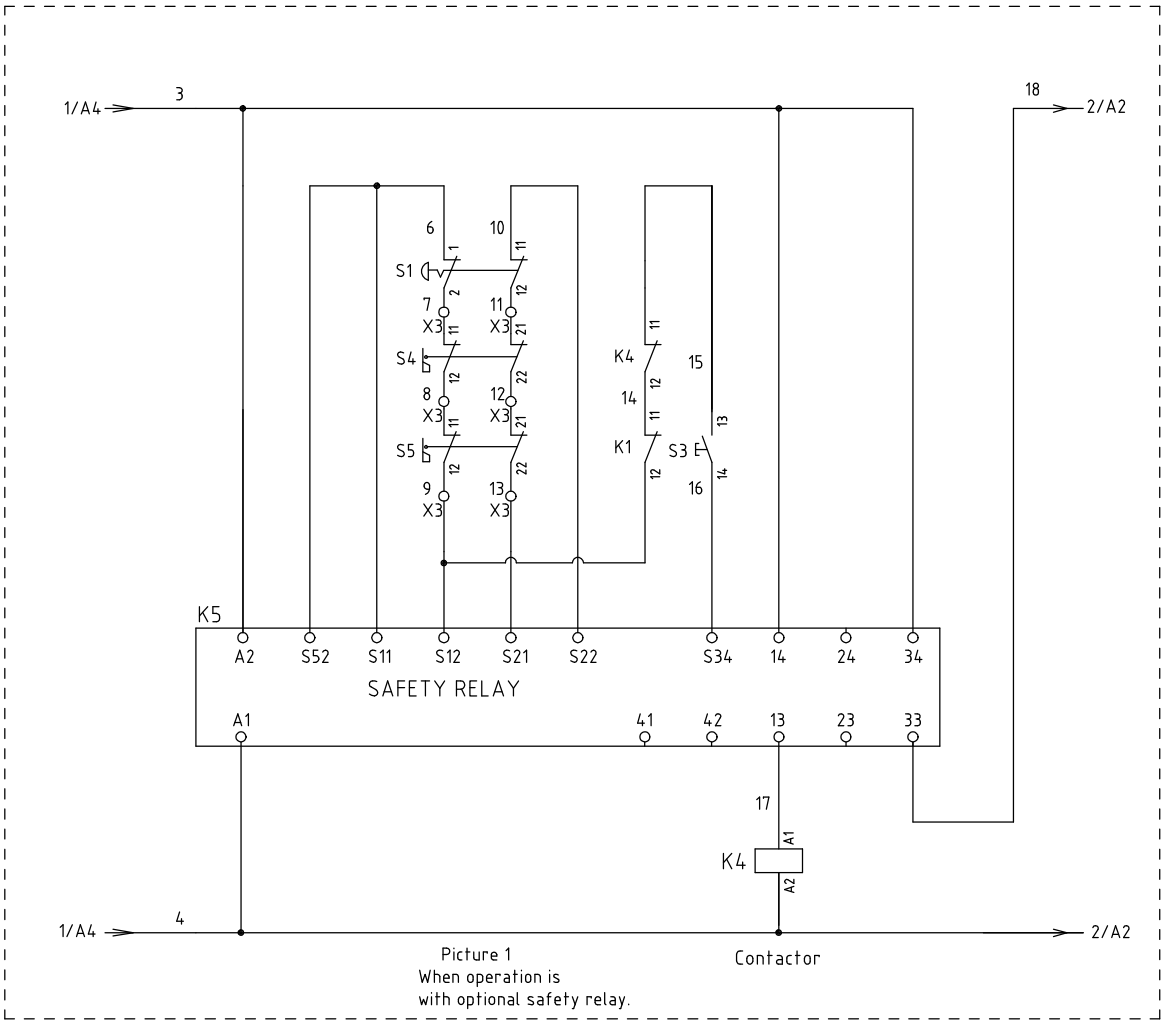

Picture 1
When operation is
with optional safety relay.

Contactor

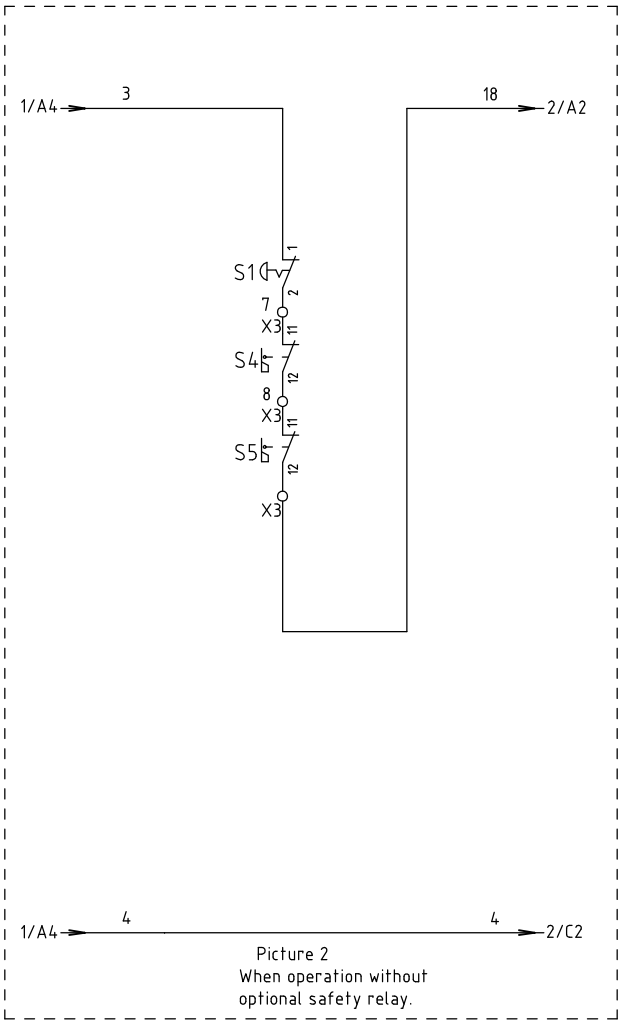

Picture 2
When operation without
optional safety relay.

Ver.B													
					Drawer		Version	0	Title SG-3650E Control Circuit Diagram 1	Drawing NO. SG-3650E-CE-400V-0-2	Scale		Page 2
					Designer		Approved by				Standard	CE	Totally 6 Pages
					Proofread by				SHINI 信易電熱機械股份有限公司 Shini Plastics Technologies, Inc.		Voltage	400V	
Mark	Before modification	After modification	Modified by	Modify date	Checked by		Date	20200810			Frequency	50Hz	

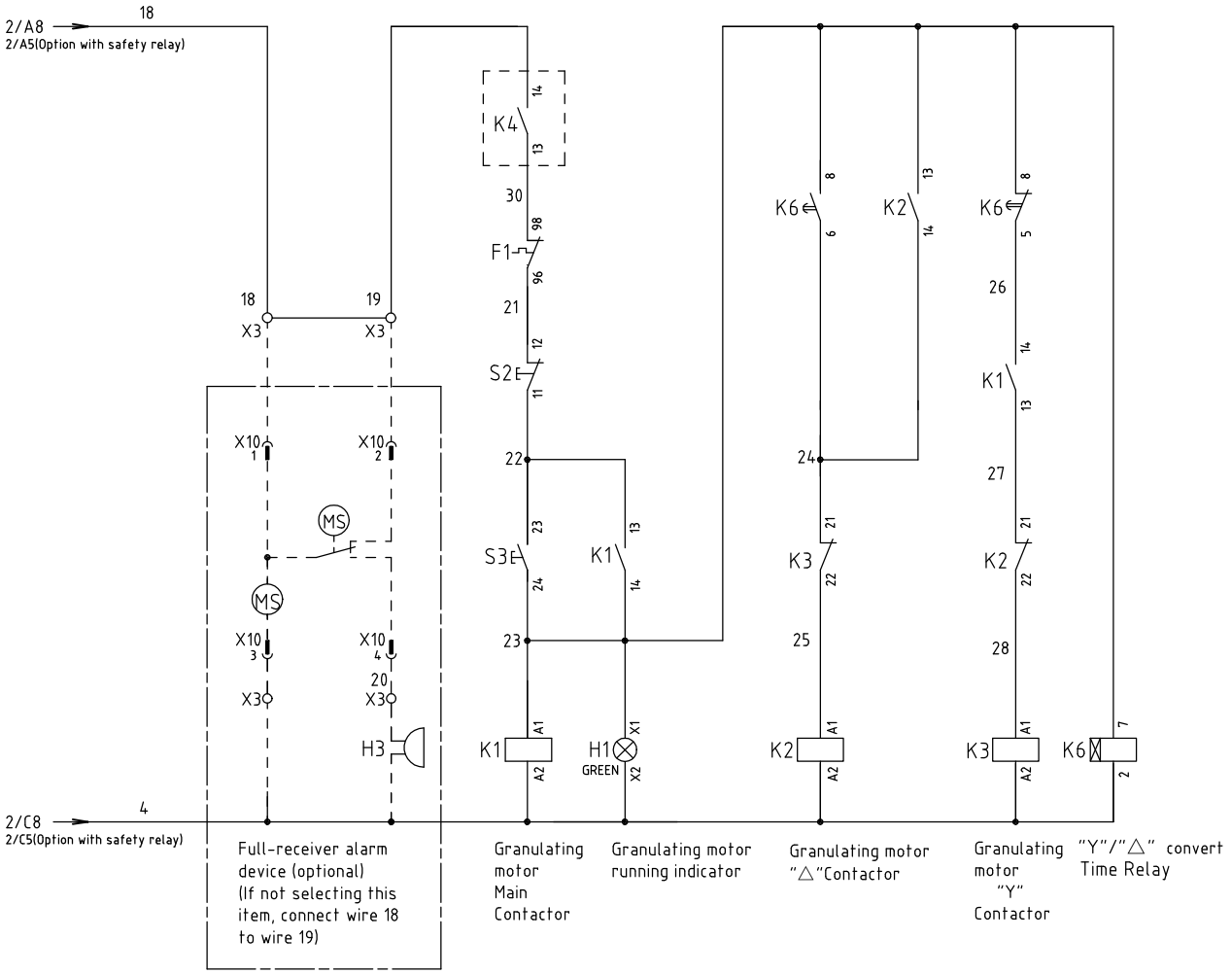

Mark	Before modification	After modification	Modified by	Modify date

Ver.B

Drawer		Version	0
Designer		Approved by	
Proofread by			
Checked by		Date	20200810

Title: SG-3650E
Control Circuit Diagram 2

Drawing NO.: SG-3650E-CE-400V-0-3

SHINI 信易電熱機械股份有限公司 Shini Plastics Technologies, Inc.

Scale		Page	3
Standard	CE	Totally	6 Pages
Voltage	400V		
Frequency	50Hz		

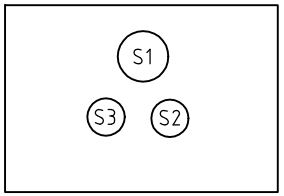

Panel

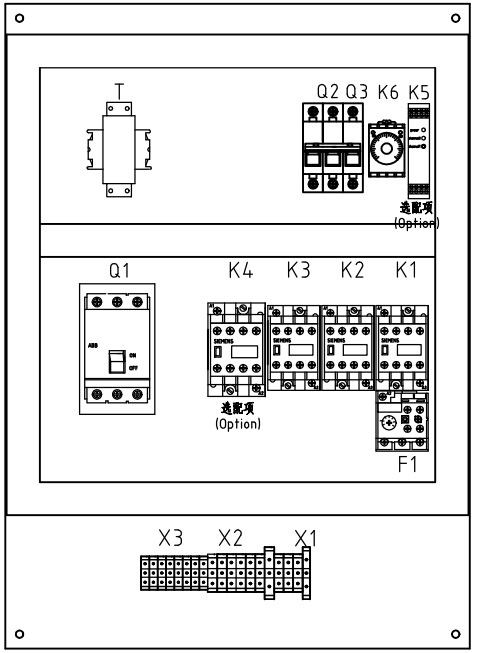

X10 Connection diagram of metal connectors (option)

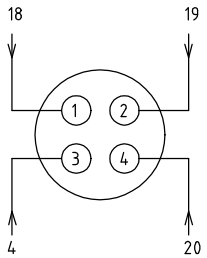

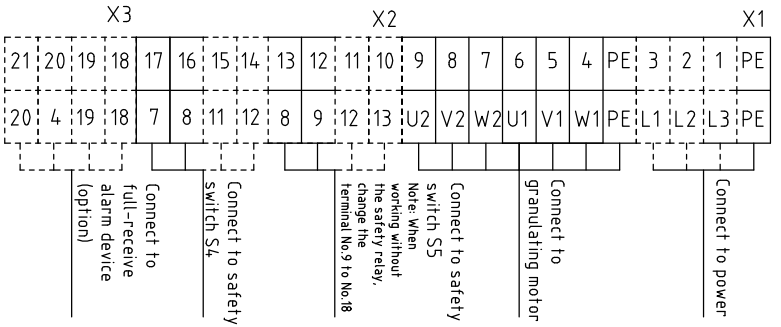

Ver.B													
					Drawer		Version	0	Title SG-3650E Electrical Components Layout	Drawing NO. SG-3650E-CE-400V-0-4	Scale		Page 4
					Designer		Approved by				Standard	CE	Totally 6 Pages
					Proofread by				信易電熱機械股份有限公司 Shini Plastics Technologies, Inc.		Voltage	400V	
Mark	Before modification	After modification	Modified by	Modify date	Checked by		Date	20200810			Frequency	50Hz	

NO.	Symbol	Name	Manufacturer	Type	Specification	Number	Material number	Remark
1	Q1	Break Interlock	ABB	A1A125TMF90/9003PFF	90A	1	YE41109200000	
2	Q2	Circuit breaker	TECO	BM-63C	3A	1	YE40200203000	
3	Q3	Circuit breaker	TECO	BM-63C	6A	1	YE40100600100	
4	K1 K2	Contactor	SIEMENS	3RT6027-1AC20	24VAC	2	YE00602702600	
5		Auxiliary Contactor	SIEMENS	3RH6911-1AA10	1NO	1	YE00691110000	New
6	K3	Contactor	SIEMENS	3RT6026-1AC20	24VAC	1	YE00602602600	
7	K4	Contactor	SIEMENS	3RT5036-1AN20	24VAC	1	YE00503602600	(3)
8		Auxiliary Contactor	SIEMENS	3RH5921-1CA01	1NC	1	YE00592110100	(3)
9		Auxiliary Contactor	SIEMENS	3RH5921-1CA10	1NO	1	YE00592110000	(3) New
10	K5	Safety realy	PILZ	PNOZ×2.8P	24V AC/DC	1	YE04023000000	(3)
11	K6	Timer realy	YUYUN	TH3A-NAB	24VAC	1	YE86602400300	
12	F1	Overload relay	SIEMENS	3RU6126-4DB0	20-25A	1	YE01260200000	
13	~~T~~	~~Transformer~~	~~BAIYUN~~	~~IN=400V OUT=24V~~	~~120VA~~	~~1~~	~~YE70402300800~~	Delete
14	T	Sensor thransformer	-------	IN=400V/415V OUT=24V	120VA	1	YE70040006600	New
15	T	Sensor thransformer	-------	IN=400V/415V OUT=24V	180VA	1	YE70040006700	(3) New
16	X1	Terminal board	HONEYWELL	6.0mm²	-------	3	YE60000603200	
17			HONEYWELL	6.0mm²PE	-------	1	YE60000603500	
18			HONEYWELL	4.0mm²	-------	6	YE60000403200	
19			HONEYWELL	4.0mm²PE	-------	1	YE60000403500	
20	X2	Terminal board	HONEYWELL	2.5mm²	-------	4	YE60002503200	
21			HONEYWELL	2.5mm²	-------	4	YE60002503200	(3)
22	X3	Terminal board	HONEYWELL	2.5mm²	-------	4	YE60002503200	(2)
23	S1	Emergency stop button	SCHNEIDER	XB2BS542C	400VAC	1	YE11254200000	(1)
24		Contact block	SCHNEIDER	ZB2BE102C	1NC	1	YE00210203100	(1)(3)
25	S2	Stop botton	SCHNEIDER	XB2BA22C	400VAC	1	YE11222000000	(1)

Ver.B

Notes: (1)Means it's not the material inside the control box. (2)Means optional accessories of full-receive alarm device. (3)Stand for optional safety relay.

Mark	Before modification	After modification	Modified by	Modify date

Drawer		Version	0
Designer		Approved by	
Proofread by			
Checked by		Date	20200810

Title: SG-3650E
Electrical Components List 1

Drawing NO.: SG-3650E-CE-400V-0-5

SHINI 信易電熱機械股份有限公司 Shini Plastics Technologies, Inc.

Scale		Page	5
Standard	CE	Totally	6 Pages
Voltage	400V		
Frequency	50Hz		

NO.	Symbol	Name	Manufacturer	Type	Specification	Number	Material number	Remark
26	S3,H1	Start button (with light)	SCHNEIDER	XB2BW33M1C	24VAC	1	YE11233100000	(1)
27		Contact block	SCHNEIDER	ZB2BE101C	1NO	1	YE00210103100	(1)(3)
28	H3	Buzzer	TEND	EA-2	24VAC	1	YE84240200000	(1)(2)
29	S4,S5	Safety switch	SCHMERSRC	AZ15-02ZVRK-1476	AZ-15	2	YE16147600100	(1)
30	S4,S5	Safety switch	SCHMERSRC	AZ16-02ZVRK-1476	AZ-16	2	YE16147600000	(1)(3)
31		Operation parts AZ17-B6	-----	-----	AZ-17	2	YE16176000000	(1)
32	MS	Material level switch	SIPAI	SR-80	24VAC	1	YE15802400100	(1)(2)
33	X10	Metal connector	APEX	PLT-254-PM	4P	1	YE68025400000	(1)(2)
34			APEX	PLT-254-RF	4P	1	YE68025400100	(1)(2)
35	M1	Granulating motor	-----	18.5kW	400V 50Hz	1	-----	(1)

Ver.B

Notes: (1)Means it's not the material inside the control box. (2)Means optional accessories of full-receive alarm device. (3)Stand for optional safety relay.

Mark	Before modification	After modification	Modified by	Modify date

Drawer		Version	0
Designer		Approved by	
Proofread by			
Checked by		Date	20200810

Title: SG-3650E
Electrical Components List 2

Drawing NO.: SG-3650E-CE-400V-0-6

SHINI 信易電熱機械股份有限公司 Shini Plastics Technologies, Inc.

Scale		Page	6
Standard	CE	Totally	6 Pages
Voltage	400V		
Frequency	50Hz		

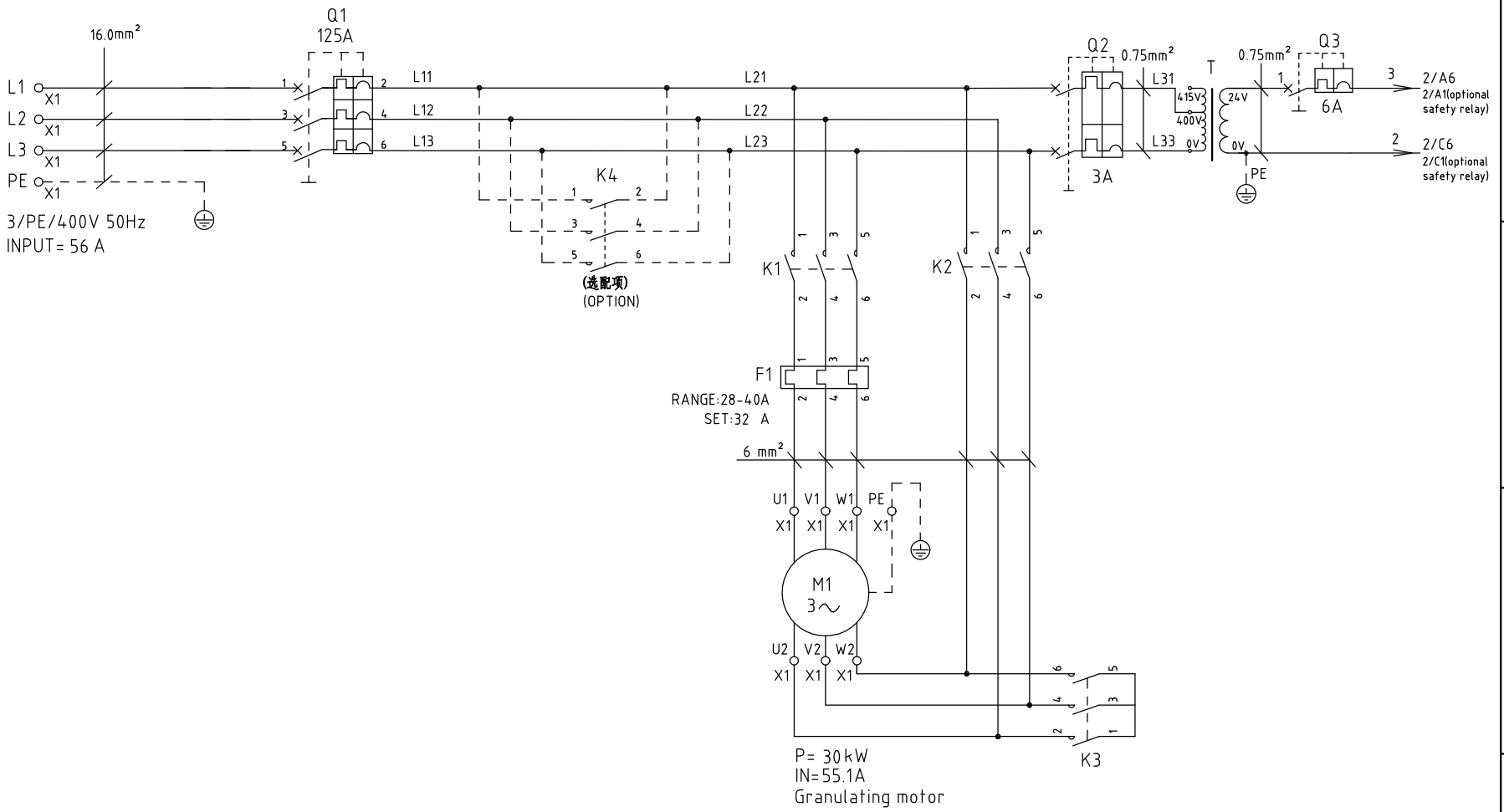

Ver.B									Title SG-3675E Main Circuit Diagram	Drawing NO. SG-3675E-CE-400V-0-1	Scale		Page 1
					Drawer		Version	0			Standard	CE	Totally 6 Pages
					Designer		Approved by						
					Proofread by				信易電熱機械股份有限公司 Shini Plastics Technologies, Inc.		Voltage	400V	
Mark	Before modification	After modification	Modified by	Modify date	Checked by		Date	20200810			Frequency	50Hz	

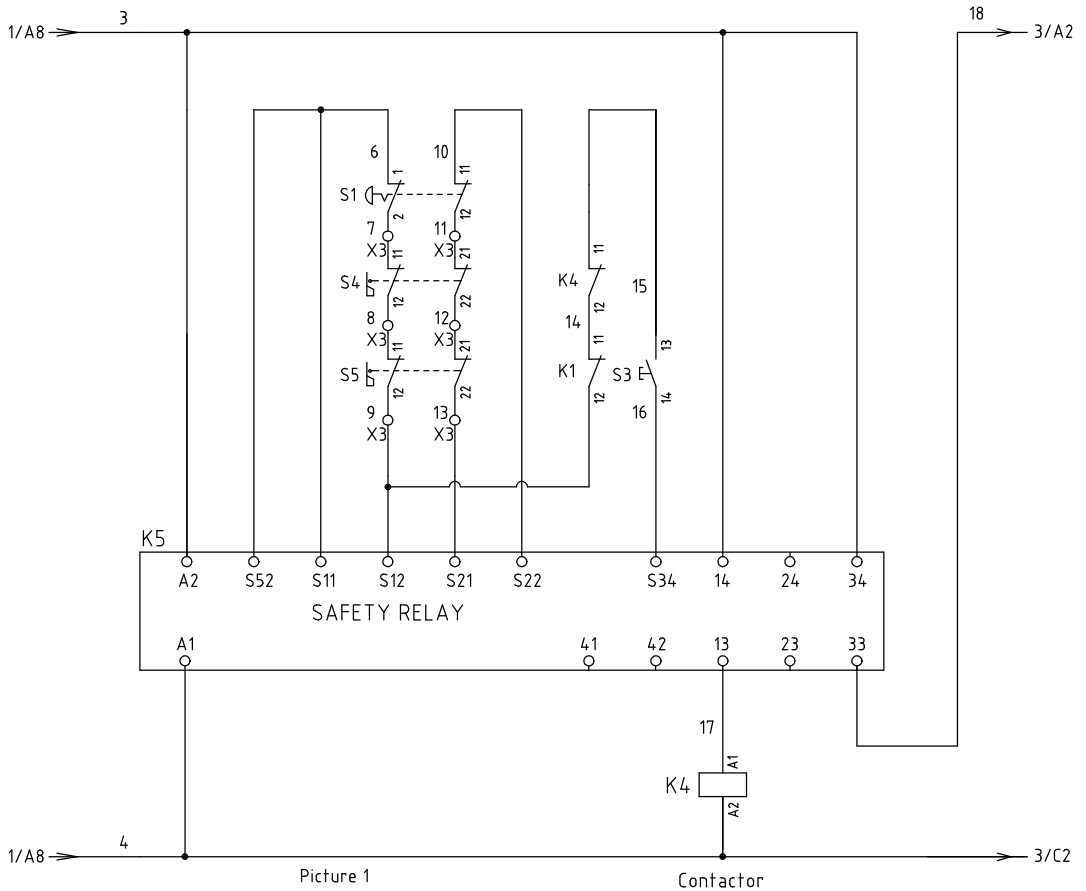

Picture 1
When operation is
with optional safety relay.

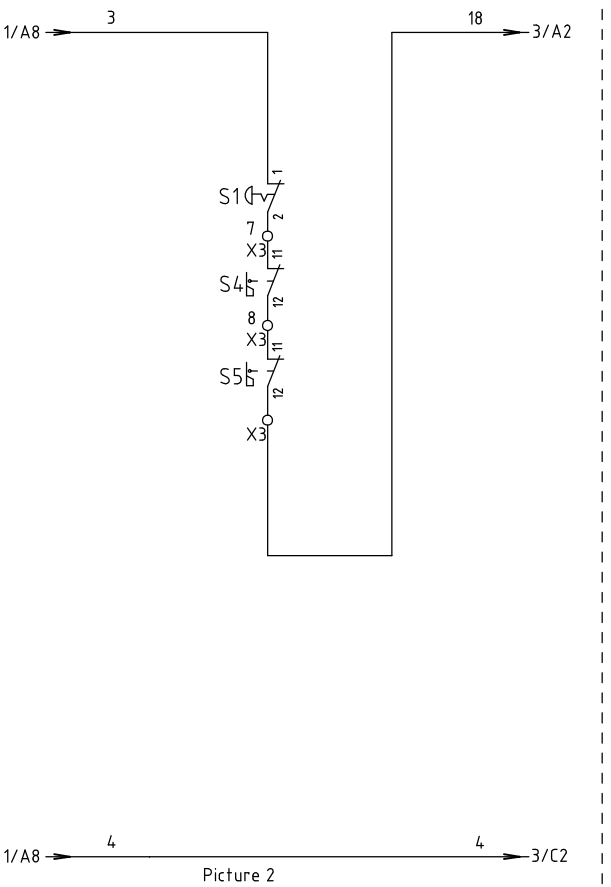

Picture 2
When operation without
optional safety relay.

Ver.B									Title SG-3675E Control Circuit Diagram 1	Drawing NO. SG-3675E-CE-400V-0-2	Scale		Page 2
					Drawer		Version	0			Standard	CE	Totally 6 Pages
					Designer		Approved by						
					Proofread by				信易電熱機械股份有限公司 Shini Plastics Technologies, Inc.		Voltage		400V
Mark	Before modification	After modification	Modified by	Modify date	Checked by		Date	20200810			Frequency		50Hz

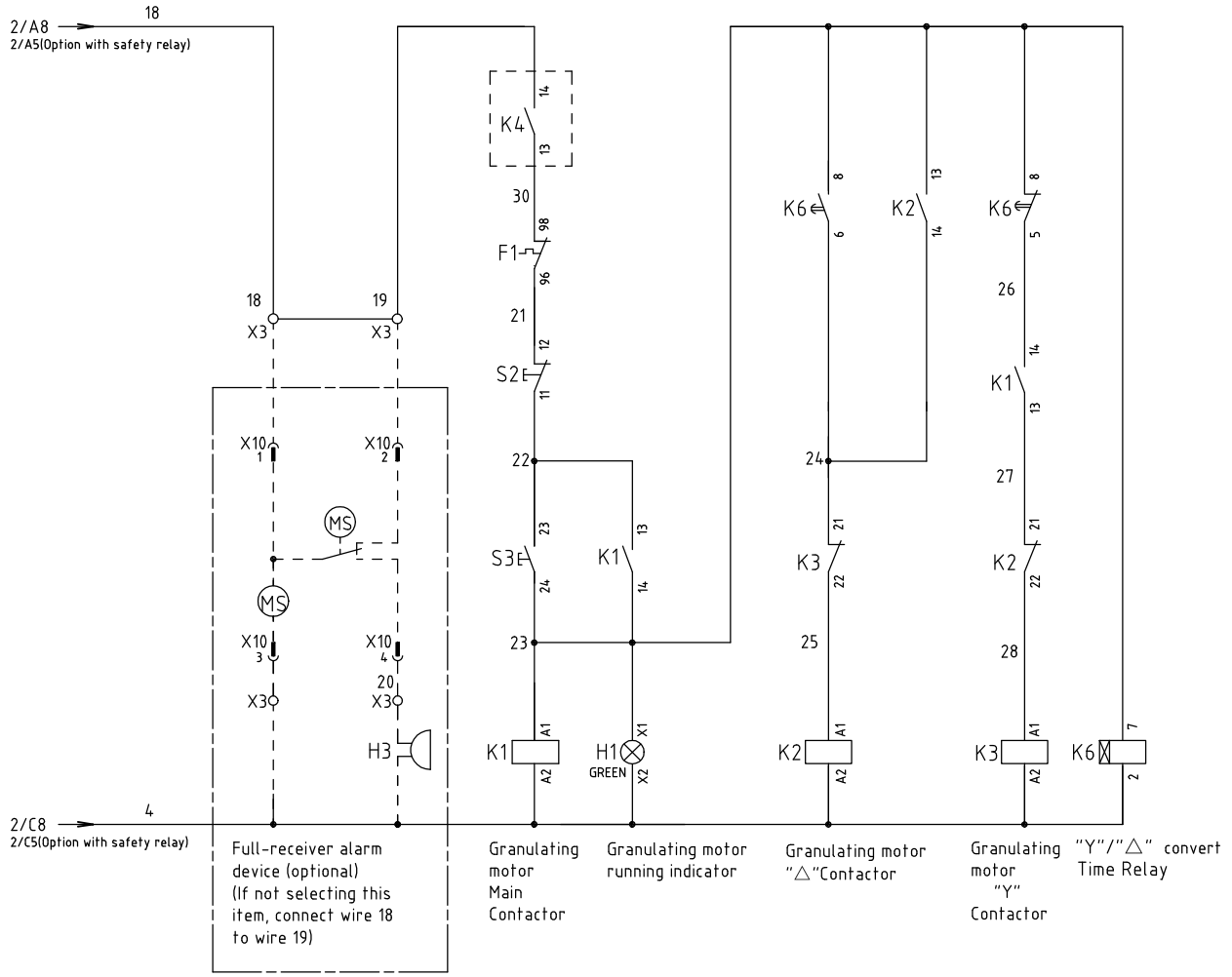

Mark	Before modification	After modification	Modified by	Modify date

Ver.B

Drawer		Version	0
Designer		Approved by	
Proofread by			
Checked by		Date	20200810

Title: SG-3675E
Control Circuit Diagram 2

Drawing NO.: SG-3675E-CE-400V-0-3

信易電熱機械股份有限公司
Shini Plastics Technologies, Inc.

Scale		Page	3
Standard	CE	Totally	6 Pages
Voltage	400V		
Frequency	50Hz		

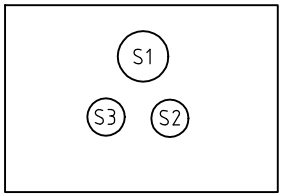

Panel

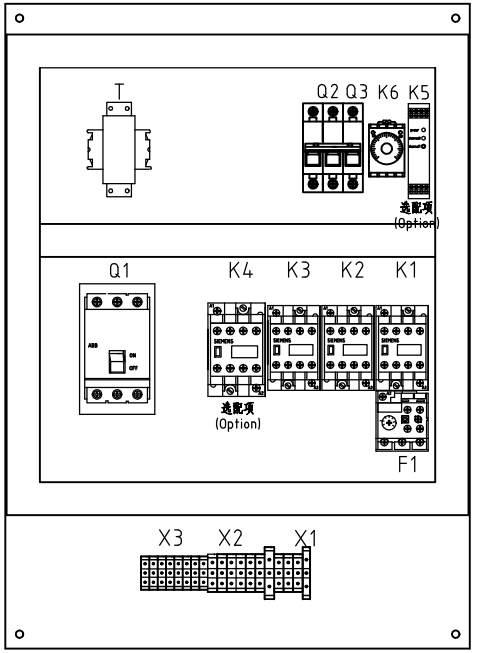

X10 Connection diagram of metal connectors (option)

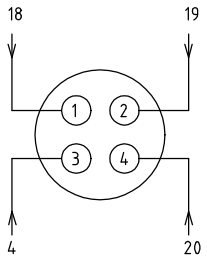

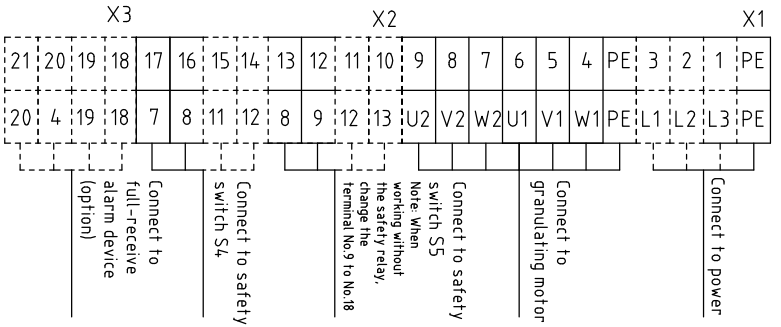

Ver.B													
					Drawer		Version	0	Title SG-3675E Electrical Components Layout	Drawing NO. SG-3675E-CE-400V-0-4	Scale		Page 4
					Designer		Approved by				Standard	CE	Totally 6 Pages
					Proofread by				信易電熱機械股份有限公司 Shini Plastics Technologies, Inc.		Voltage	400V	
Mark	Before modification	After modification	Modified by	Modify date	Checked by		Date	20200810			Frequency	50Hz	

NO.	Symbol	Name	Manufacturer	Type	Specification	Number	Material number	Remark
1	Q1	Break Interlock	ABB	A1A125TMF125/12503PFF	125A	1	YE41161400000	
2	Q2	Circuit breaker	TECO	BM-63C	3A	1	YE40200203000	
3	Q3	Circuit breaker	TECO	BM-63C	6A	1	YE40100600100	
4	K1 K2	Contactor	SIEMENS	3RT5035-1AC20	24VAC	2	YE00503502600	
5		Auxiliary Contactor	SIEMENS	3RH5921-1CA10	1NO	1	YE00592110000	New
6	K3	Contactor	SIEMENS	3RT6028-1AC20	24VAC	1	YE00602802600	
7		Auxiliary Contactor	SIEMENS	3RH5921-1CA10	1NO	2	YE00592110000	
8		Auxiliary Contactor	SIEMENS	3RH5921-1CA01	1NC	2	YE00592110100	
9	K4	Contactor	SIEMENS	3RT5045-1AC20	24VAC	1	YE00504502600	(3)
10		Auxiliary Contactor	SIEMENS	3RH5921-1CA01	1NC	2	YE00592110100	(3)
11		Auxiliary Contactor	SIEMENS	3RH5921-1CA10	1NO	1	YE00592110000	(3)New
12	K5	Safety realy	PILZ	PNOZ×2.8P	24V AC/DC	1	YE04023000000	(3)
13	K6	Timer realy	YUYUN	TH3A-NAB	24VAC	1	YE86602400300	
14	F1	Overload relay	SIEMENS	3RU5136-4FB0	28-40A	1	YE01513600100	
15	~~T~~	~~Transformer~~	~~BAIYUN~~	~~IN=400V OUT=24V~~	~~120VA~~	~~1~~	~~YE70402300800~~	Delete
16	T	Sensor thransformer	-------	IN=400V/415V OUT=24V	180VA	1	YE70040006700	New
17	T	Sensor thransformer	-------	IN=400V/415V OUT=24V	350VA	1	YE70040009900	(3) New
18	X1	Terminal board	HONEYWELL	16mm²PE	-------	1	YE60001603500	
19			HONEYWELL	6mm²	-------	6	YE60000603200	
20			HONEYWELL	6mm²PE	-------	1	YE60000603500	
21	X2	Terminal board	HONEYWELL	2.5mm²	-------	4	YE60002503200	
22			HONEYWELL	2.5mm²	-------	4	YE60002503200	(3)
23	X3	Terminal board	HONEYWELL	2.5mm²	-------	4	YE60002503200	(2)
24	S1	Emergency stop button	SCHNEIDER	XB2BS542C	400VAC	1	YE11254200000	(1)
25		Contact block	SCHNEIDER	ZB2BE102C	1NC	1	YE00210203100	(1)(3)

Ver.B

Notes: (1)Means it's not the material inside the control box. (2)Means optional accessories of full-receive alarm device. (3)Stand for optional safety relay.

Mark	Before modification	After modification	Modified by	Modify date

Drawer		Version	0
Designer		Approved by	
Proofread by			
Checked by		Date	20200810

Title: SG-3675E
Electrical Components List 1

Drawing NO.: SG-3675E-CE-400V-0-5

SHINI 信易電熱機械股份有限公司 Shini Plastics Technologies, Inc.

Scale		Page	5
Standard	CE	Totally	6 Pages
Voltage	400V		
Frequency	50Hz		

NO.	Symbol	Name	Manufacturer	Type	Specification	Number	Material number	Remark
26	S2	Stop botton	SCHNEIDER	XB2BA22C	400VAC	1	YE11222000000	(1)
27	S3,H1	Start button (with light)	SCHNEIDER	XB2BW33M1C	24VAC	1	YE11233100000	(1)
28		Contact block	SCHNEIDER	ZB2BE101C	1NO	1	YE00210103100	(1)(3)
29	H3	Buzzer	TEND	EA-2	24VAC	1	YE84240200000	(1)(2)
30	S4,S5	Safety switch	SCHMERSRC	AZ15-02ZVRK-1476	AZ-15	2	YE16147600100	(1)
31	S4,S5	Safety switch	SCHMERSRC	AZ16-02ZVRK-1476	AZ-16	2	YE16147600000	(1)(3)
32		Operation parts AZ17-B6	-----	-----	AZ-17	2	YE16176000000	(1)
33	MS	Material level switch	SIPAI	SR-80	24VAC	1	YE15802400100	(1)(2)
34	X10	Metal connector	APEX	PLT-254-PM	4P	1	YE68025400000	(1)(2)
35			APEX	PLT-254-RF	4P	1	YE68025400100	(1)(2)
36	M1	Granulating motor	-----	30kW	400V 50Hz	1	-----	(1)

Ver.B

Notes: (1)Means it's not the material inside the control box. (2)Means optional accessories of full-receive alarm device. (3)Stand for optional safety relay.

Mark	Before modification	After modification	Modified by	Modify date

Drawer		Version	0
Designer		Approved by	
Proofread by			
Checked by		Date	20200810

Title: SG-3675E
Electrical Components List 2

Drawing NO.: SG-3675E-CE-400V-0-6

信易電熱機械股份有限公司
Shini Plastics Technologies, Inc.

Scale		Page	6
Standard	CE	Totally	6 Pages
Voltage	400V		
Frequency	50Hz		